Erasmus+

KA2: Cooperation for innovation and the exchange of good practices - Knowledge Alliances

Application Form

Call: EAC/A02/2019

Deadline: 26.02.2020 (17:00 CET, Brussels time)

Knowledge Alliances

European Knowledge Alliance for Accelerating the Diffusion of Innovation in High Value Manufacturing Ecosystems (ADI-HVM)

(DETAILED PROJECT DESCRIPTION)

(To be attached to the eForm)

EN Version 2019

TABLE OF CONTENT

PART 0. Project summary and involvement in previous relevant projects

0.1. Please provide a short summary of the main features and outputs of your project

ADI-HVM aims to strengthen Europe's innovation capacity and at fostering innovation in higher education, business and the broader socio-economic environment of the EU. The expected outcome is to help disruptively accelerate the value creation from ideas in high value manufacturing (HVM) ecosystems from ideation to market saturation. This will be achieved by designing, developing, and sustainably implementing a career framework to generate new skills and capabilities in project, program management and entrepreneurism based upon principles of the Open Education Europe initiative.

HVM is the application of leading edge technical knowledge and expertise to the creation of products and associated services which have strong potential to bring sustainable growth and high economic value. Such potential is characterised by a combination of high R&D intensity and high growth typically found in industries such as aerospace and pharmaceuticals.

The career framework will be developed and implemented for higher education, vocational training and continuous professional development. The programme will consist of joint-accredited, stackable and micro-certified multi-disciplinary learning modules around an easy to use simulation and forecaster of innovation system behaviour and the path of ideas from ideation to market saturation. Liberal arts aspects will be integrated with key STEM principles.

ADI-HVM will furthermore create (a) an open, adaptive and inclusive community of applied learning and collaboration from a diverse set of higher education, business, and individuals, (b) a system dynamics simulator based on living systems principles, which enables the forecasting and monitoring of the end-to-end innovation journey and its value creation based on principles of intellectual capital reporting, (c) a set of actionable interventions for accelerating the speed of value creation, and (d) policy recommendations at individual, organizational, regional and EU levels.

0.2. Involvement in previous relevant projects

Reference number	N/A		
Project / network dates *(year started and completed)*	2004-2005	**Programme or initiative**	European Commission Directorate General Information Society
Title of the project / network	"Evaluation of Networks of Collaboration in IST Research within the European Research Area" (ERAnets)"		
Coordinating organisation	RAND Europe		
Website	https://ec.europa.eu/research/evaluations/pdf/archive/fp6-evidence-base/evaluation_studies_and_reports/evaluation_studies_and_reports_2005/eranets_evaluation_of_networks_of_collaboration__2005.pdf		
Password / login if necessary for website	N/A		
Please summarise the project/network outcomes and describe (a) how the new proposal seeks to build on them and, (b) how ownership / copyright issues are to be dealt with (limit 500 characters)			
FP6 Information Society and Technology projects created networks to share know-how and conduct research. Networks are particularly important to the European Research Area (ERA) to link geographically-distant centres of excellence and to disseminate knowledge across Europe. This vision of a networked knowledge economy is also central to the Lisbon Objectives. Using network analysis this study examined dynamics created within the ERA at the system-wide level. ADI-HVM builds on the proposal with an enhanced form of network analysis and simulation including the introduction of living systems principles. No copyright issues are expected.			

Reference number	Ares(2013)2937293 - 28/08/2013		
Project / network dates *(year started and completed)*	2007	**Programme or initiative**	European Commission Directorate General Information Society
Title of the project / network	"Effectiveness of ICT RTD Impacts on the EU Innovation System"		
Coordinating organisation	ALTEC SA		
Website	https://op.europa.eu/en/publication-detail/-/publication/1fa86f11-7b6d-4b19-b4be-21bcba811262		
Password / login if necessary for website	N/A		
Please summarise the project/network outcomes and describe (a) how the new proposal seeks to build on them and, (b) how ownership / copyright issues are to be dealt with (limit 500 characters)			
The purpose of this evaluative study was to assess where and how regional innovation systems can be reinforced by EU, Member State and Regional initiatives aimed at strengthening links between ICT RTD and deployment. The focus was on understanding regional innovation as an ecology that converts ICT related knowledge diffusion and value creation into long-term competitiveness and economic growth. ADI-HVM builds on the proposal with an enhanced form of network analysis and simulation including the introduction of living systems principles. No copyright issues are expected.			

PART I. Project relevance

I.1. Why has the consortium decided to undertake this project?

The purpose of the project is to enable high value manufacturing (see https://www.gov.uk/government/publications/high-value-manufacturing-strategy-2012-to-2015) organizations to significantly accelerate the "speed of value creation" from ideation to market saturation. This will be enabled through new tools and techniques, and the creation of new skills for the operators of these processes at all levels in their organizations. A relevant career framework to shape and guide this change in paradigm at vocational, higher education and continuous professional development will be developed and implemented.

The speed of value creation was prioritized especially because social and political pressure is rapidly growing for industry to adapt to immediate and growing global challenges such as population growth, climate change and trade imbalances. Especially industries with comparatively complex products struggle to address these challenges in a timely manner.

The major financial and planning uncertainties in this context give rise to concern in high value manufacturing spaces. The lower the speed of value creation the greater the uncertainty associated with successfully evolving from the front-loaded high investment profile to a profit generation phase through asset usage. High uncertainty exists because the needed changes are complex adaptions (innovations) of highly regulated design and manufacturing engineering solutions in very complicated whole product life cycles, which can span multiple decades. Additionally these innovations occur in deeply tiered globally diverse supply networks and eco-systems, and must diffuse to a point of market saturation in order to generate the intended benefits. This uncertainty is very dynamic and involves a very high number of interdependent (systemic) variables, which leads to volatile risk profiles that are extremely difficult to forecast with the robustness required for investment decision making and monitoring.

Disruptively accelerating the diffusion of innovation from ideation to market saturation requires acknowledgement of the complex adaptive nature of the innovation phenomenon and shifting the perspective from linear process to living systems. It also means focusing on ecosystems versus individual organizations. Ecosystems are that interplay of multiple stakeholders assuming multiple roles in a web of tangible and intangible exchanges that work towards a shared purpose. Innovation is understood as the ability to transfer knowledge from the point of origin to the point of highest need across the complete whole product life cycle and diffusion of innovation curve from ideation to market saturation.

Achieving these aims will require establishing new, innovative and multidisciplinary approaches to teaching, learning and policy making across all phases of the whole product life cycle and diffusion of innovation curve. This will in turn stimulate entrepreneurship and entrepreneurial skills of higher education staff and company staff by providing an integrated holistic perspective of the innovation journey.

The below image illustrates the complete story of interest. See also https://open-european-innovation-network.blogspot.com/2019/11/adi-hvm-one-page-overview-living.html and https://open-european-innovation-network.blogspot.com/2019/12/moving-toward-living-systems-diffusion.html.

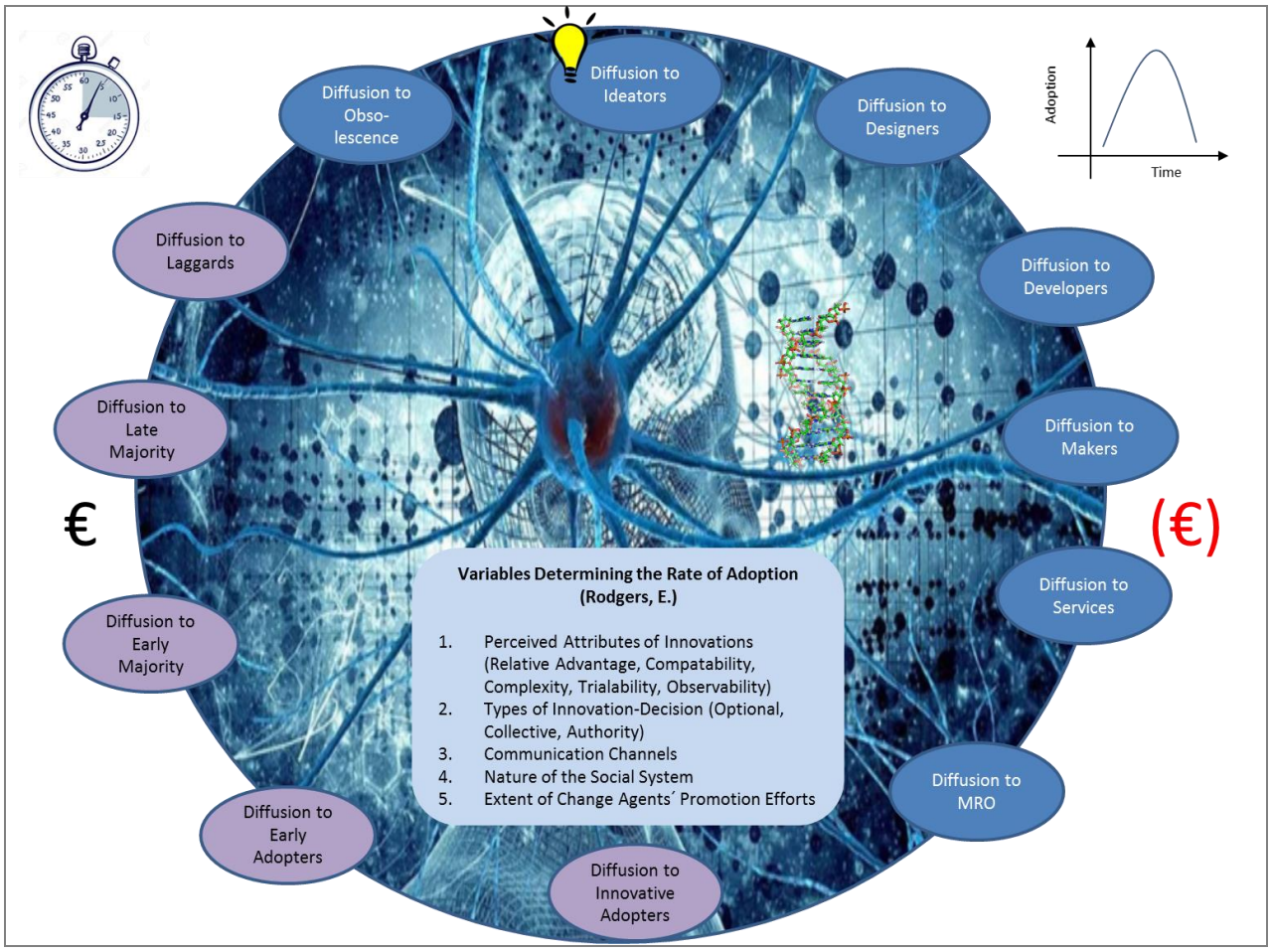

I.1.2 Please explain how the project proposal fits into the objectives of the participating organisations and European policies in the fields of education and training.

The participating organizations are all members in the Open European Network for ENTerprise InnOVation in High Value Manufacturing (ENTOV-HVM) – see www.innovation-web.eu - and share the aspiration to disruptively accelerate the diffusion of innovation in high value manufacturing from ideation to market saturation. They agree that the lack of suitable methods and ensuing skills gaps are the primary cause for the low percentage of such ideas being successful and even if so then achieving this only over long periods of time.

The project proposal fits into the objectives of these organizations as follows:

- Participating higher education institutions from European Cooperation in Science and Technology (COST) target inclusiveness countries strive to improve their integration with more research intensive countries for young professionals and early career researchers (see also www.cost.eu).
- Participating higher education institutions from non-COST target inclusiveness countries strive to innovate and expand their offerings through the creation of working groups which are as diverse as possible and leverage the wide range of perspectives found across EU members.
- Participating manufacturing organizations share an intensive interest in significantly reducing the time from ideation to market saturation in order to improve their competitiveness and financial performance. In this respect they acknowledge that contemporary approaches at best enable incremental improvements which do not meet their needs for more disruptive change.
- Manufacturing intermediaries strive to support manufacturing organizations to discover and implement approaches for achieving their interests and are intensively interested in applying collaborative and novel approaches to achieving these aims for their customers.

The project proposal supports the European policies in the fields of education and training as formulated by the European Policy Cooperation (ET 2020 framework – see https://ec.europa.eu/education/policies/european-policy-cooperation/et2020-framework_en) as follows:

- Support of a lifelong training approach by co-creating and piloting a curriculum and community of applied learning and collaboration that is not only suitable at vocational, higher education and continuous professional development levels, but also structured in order to ease accessibility at all career / age levels and supporting formal, non-formal and informal knowledge creation and exchange. This supports the common European Union objective of making lifelong learning a reality.
- The project proposal also supports the common European Union objective of improving the quality and efficiency of education and training by addressing a specific relevant skills gap and helping to close that through Open Education principles (see http://www.european-net.org/2015/06/open-education-europa/).
- The project proposal furthermore promotes cohesion within the European Union by playing special emphasis on enabling young professionals and early career researchers from COST target inclusiveness countries to assume ownership of work packages and benefit from a mentoring approach embedded in the governance structure.

I.1.3 Please explain how the expected results, outputs and outcomes will meet the identified needs.

The project will create a new career path and development framework focused on "innovation ecosystem acceleration" with a focus on high value manufacturing based on the novel use of living systems theory to describe the innovation ecosystem(s). Specifically the project will create:

- an open, adaptive and inclusive community of applied learning and collaboration (building on learning from KnowledgeBoard 2.0 https://cordis.europa.eu/project/id/002030) to address the need for knowledge sharing and enable relevant skills,
- a living systems based system dynamics simulator, forecaster and monitor of the end-to-end innovation journey and its value creation based on principles of intellectual capital reporting (building on "RICARDIS: Reporting Intellectual Capital to Augment Research, Development and Innovation in SMEs" at https://ec.europa.eu/invest-in-research/policy/capital_report_en.htm, http://akwissensbilanz.org/wp-content/uploads/2018/07/European-ICS-Guideline.pdf and https://cordis.europa.eu/project/id/30485/reporting/es) to provide a reference framework for increased understanding of this journey,
- a coherent set of actionable treatments and interventions for accelerating the speed of value creation to enable rapid application of newly generated knowledge in practice,
- policy recommendations at individual, organizational and systemic levels in partner regions and the European Union to support the sustainable implementation of new knowledge, and
- create and launch a specialized curriculum as a specialisation of the "Responsible and Flexible Career Development Framework for Researchers" (see https://euraxess-reflex.saia.sk/en/) at vocational, higher education and continuous professional development / training levels following the principles of Open Education to disseminate the generated knowledge as widely as possible.

I.2. Analysis of the subject area (current state of the art) and innovative character

Please explain how the needs analysis has been carried out. Please indicate what the project is offering that is new and different. Please also indicate what the main innovative elements of the method(s), result(s), approach(es), etc. are. (

The project is designed as a response to the results of a needs analysis which re-evaluated the results of multiple relevant prior research studies the project participants have been involved such as "ERAnets. Evaluation of NETworks of Collaboration Among Participants in IST Research and their Evolution to Collaborations in the European Research Area (ERA)" (see https://ec.europa.eu/research/evaluations/pdf/archive/fp6-evidence-base/evaluation_studies_and_reports/evaluation_studies_and_reports_2005/eranets_evaluation_of_networks_of_collaboration__2005.pdf) and "Effectiveness of ICT RTD Impacts on the EU Innovation System (see https://op.europa.eu/en/publication-detail/-/publication/1fa86f11-7b6d-4b19-b4be-21bcba811262), conducted a literature and report review (in particular the Commission and OECD recommendations to help EU countries and regions achieve industrial transition (2019 – see https://ec.europa.eu/regional_policy/en/newsroom/news/2019/11/14-11-2019-commission-and-oecd-publish-recommendations-to-help-eu-countries-and-regions-achieve-industrial-transition), the European Commission (2019) European Innovation Scoreboard and Regional Innovation Scoreboard (2019 – see https://ec.europa.eu/growth/industry/innovation/facts-figures/regional_en) and the EU Commission Innovation Radar (2019 – see https://ec.europa.eu/digital-single-market/en/innovation-radar). Semi-structured interviews were also conducted with institutes of vocational and higher education as well as small, medium and industry sized enterprises across multiple EU regions during the solicitation for project membership regarding the application of diffusion of innovation research methods to the high value manufacturing context. The primary outcome of the needs analysis was the importance for high value manufacturing to focus on the "speed of value creation" through innovation from end-to-end across all technical readiness levels and market diffusion stages while current innovation approaches in higher education and high value manufacturing at all levels are focused on "technical readiness of products", innovators and early adopters in the market and internally focused business cases. A relevant career

framework to shape and guide this change in paradigm at both higher educational and continuous professional development levels is missing. The project represents a new and different approach contributing to knowledge in that it uses living systems thinking and ecosystem paradigms to describe the evolution from an innovation from ideation to market saturation.

In addition an extensive literature research and numerous semi-structured interviews with industry and higher education experts were performed in order to identify the most promising approaches for reducing this uncertainty. The most promising approach identified is the massive acceleration of the diffusion of disruptive innovations from ideation to market saturation is fundamental. This then permits that rapid step-changes in performance needed in order to effectively address the global challenges of relevance. The proposed knowledge alliance aims to help decrease strategic performance gaps in highly regulated industrial enterprises, which operate in markets with highly uncertain future conditions, such as aerospace, and pharmaceuticals. The path to sustainable implementation of this approach has been determined to be an appropriate career framework aligned with the Open Education Framework and focused both on higher education and continuous professional development.

I.3. Aims and objectives

I.3.1 Please define the specific aims and objectives of the project and how these will address the problems and challenges identified in sections I.1 and I.2. Also indicate how the project will contribute to achieve the objectives of the Knowledge Alliances action.

The aim of the project is to create a new career path and development framework focused on "innovation ecosystem acceleration" with a focus on high value manufacturing and the path of an innovation from ideation to market saturation.

The key objectives of the project are:

1. create an open, adaptive and inclusive community of applied learning and collaboration from a highly diverse spectrum of participants from higher education, manufacturing business, manufacturing intermediaries and the arts,
2. develop a living systems based system dynamics simulator, forecaster and monitor of the end-to-end innovation journey and its value creation based on principles of intellectual capital reporting,
3. design a coherent set of actionable treatments and interventions for accelerating the speed of value creation,
4. make policy recommendations at individual, organizational and systemic levels in partner regions and the overarching European Union, and
5. create and pilot a curriculum at vocational, higher education and continuous professional development levels based on Open Education principles.

The aims and objectives will contribute to achieve the objectives of Knowledge Alliance actions as follows:

- the living systems simulation and actionable treatments and interventions as the foundation for the curriculum that will be developed will create the foundation for developing new, innovative and multidisciplinary approaches to teaching and learning since it represents a significant paradigm shift in the understanding of the innovation journey and connects the whole product life cycle with the diffusion of innovation principles,
- the embedded principles of applied research and experimental innovation (including the actual implementation of generated ideas using simulation principles) will stimulate entrepreneurship and entrepreneurial skills of higher education teaching staff and staff in manufacturing organizations and intermediaries,
- the community of applied learning and collaboration will facilitate the exchange, flow and co-creation of knowledge between stakeholders across the complete innovation journey, and
- the policy recommendations will contribute to ensuring that ongoing and future policy making in respect to improving the innovation capabilities of Europe in the space of high value manufacturing not only consider the need for a paradigm shift in understanding the innovation journey, but also shift to supporting the ecosystem behaviour that truly works (bottom up), versus trying to implement abstract top down models that leave the needed critical holistic interactions to themselves.

I.3.2 Please explain the contribution of higher education institutions to the project and how they will benefit from the project in the short and long term.

Higher education institutions will primarily contribute by:

- ensuring scientific integrity of project research activities,
- shaping the curriculum to fit higher education needs,
- integrating the curriculum with their programmes,
- accrediting the curriculum at vocational, higher education and continuous professional development levels,
- acting as points of contact into the project for participating manufacturing and intermediary organizations, and
- piloting the curriculum in their institutions.

Short term benefits are:

- participation (and publishing) in a novel field of great interest to high value manufacturing industry,
- new tools / processes for accelerating diffusion of innovations from higher education contexts to business, and
- greater visibility of institutional expertise to business through activities in and deliverables of workshops and regional events which will be marketed widely.

Longer term benefits are:

- new income through new curriculum delivery,
- improved skills set of graduates, thus bettering the reputation of the higher education institutes, which in turn leads to a higher number and skill of applicants for courses,
- attracting new students through institutional and business partnerships offering a joint-accredited curriculum, and
- improved development, design and delivery of offerings through focus on late adopter implementation / utilization of knowledge.

Higher education institutions will further benefit through acceleration of mission achievement through improvement of the effectiveness of stakeholders transactions through communities of collaboration, and developing new skills and capabilities in project, program management and entrepreneurism through the implementation of living systems based complexity theory.

I.3.3 Please explain the contribution of enterprises to the project and how they will benefit from the project in the short and long term. Please refer to the nature/ field of their economic activity.

Manufacturing enterprises and their intermediaries will primarily contribute:

- case studies for the creation of the simulation,
- influencing the curriculum to fit high value manufacturing needs, at vocational, higher education and continuous professional development levels, and
- acting as sponsors for workshops to be held throughout the project.

Short term benefits are:

- reduced financial uncertainty for new product introduction and faster path to revenue,
- new tools and processes for accelerating the diffusion of innovations from ideation to market saturation.
- greater visibility of expertise to customers and suppliers through their integration with case studies and validation / implementation phase, and
- participation (and publishing) in a novel project of great interest to high value manufacturing industry.

Longer term benefits are:

- improved development, design and delivery of offerings through improved design of ideas and innovation systems for rapid diffusion from ideation to market saturation, and
- improved skill set of graduate employees, which reduces the requirement for in-house training

Manufacturing enterprises and their intermediaries will further benefit through acceleration of mission achievement through improvement of the effectiveness of stakeholders transactions through communities of collaboration, and

developing new skills and capabilities in project, program management and entrepreneurism through the implementation of living systems based complexity theory.

I.4. European added value

Please describe the benefits of, and need for, European cooperation. Please also describe why the results cannot be achieved through cooperation at national, regional or local level

Both research in Europe and the operations of high value manufacturing companies have evolved to be dominated by transnational collaboration both within Europe and globally across its boundaries. This project follows this way of working in order to achieve its aims and objectives in line with the needs of higher education and high value manufacturing enterprises and their intermediaries. In particular the project takes a "bottom up" approach in designing European cooperation at an enterprise level where the products and associated knowledge are actually created, versus national, regional or local levels where the focus is primarily on shaping the conditions for this to occur. While the latter will be considered as significant influencers on the innovation ecosystem(s) and diffusion of innovation from ideation to market saturation, the individual manufacturing enterprise is in fact placed in a central role to ensure the focus in maintained on the needs identified.

European cooperation in the project will help ensure:

- global comparability of the results from Europe with other economic and regional zones and federations thus enabling the design of solutions which support Europe´s global competitiveness,
- increase in diversity among project members to ensure the greatest possibility of developing highly innovative solutions,
- alignment of skills in the extended ecosystems of European high value manufacturing enterprises,
- defragmentation of cultural and economic differences, especially in regards to the balance of access to industry and research for COST target inclusiveness countries and the young professionals and early career researchers in these, and
- support of social and economic cohesiveness across Europe´s member nations.

Furthermore, due to the planned joint accreditation of the career framework and curriculum at vocational, higher education and continuous professional development efforts, the basis for eased mobility between Europe´s member states will be created. The Open Education perspective and community of applied learning and collaboration will additionally ease and support the flow of knowledge across Europe in a focused manner.

While the project will provide a single solution for all contributing countries and industries this solution will be designed for easy tailoring for local cultural considerations.

PART II. Quality of the project design and implementation

II.1. Methodology

Please explain the strategy that will be adopted by the consortium to address the needs identified; also describe the methodology proposed for implementing the proposed Work Packages/activities and for achieving the expected objectives (including major milestones and contributors, how the different Work Packages and produced outputs will be inter-connected/articulated, measurable indicators, etc.).

The fundamental aim of the project is to create and pilot a curriculum / career framework which enables participants to disruptively accelerate the innovation journey from ideation to market saturation in high value manufacturing. In order to achieve this aim the project will apply a five phase data driven strategy consisting of Define, Measure, Analyse, Improve, and Control (DMAIC) activities structured into work packages (WP). The strategy will be implemented in a waterfall model within which some tasks may be completed using agile approaches if the relevant team dynamics permit such. Each WP will be supported by ALL other project members in order to accelerate learning and increase the probability of other WP success based upon wisdom of the crowds principles.

Two WP groups exist. The first is related to managing the project as such and consists of WP 1 “Preparation”, WP 2 “Management”, WP 3 “Quality Assurance”, WP 4 “Effectiveness Evaluation”, and WP 5 “Dissemination and Exploitation of Results”. WPs 2-5 run the duration of the project. The second WP group is related to achieving the key deliverables of the project and consist of WP 6 “Create Career Frameworks”, WP 7 “Create Collaboration Community”, WP 8 “Create Simulation”, WP 9 “Conduct In-Depth Needs Analysis”, WP 10 “Case Studies and Validation”, WP 11 “Identify Variables and Game Changers”, WP 12 “Create Risk and Uncertainty Management Framework”, WP 13 “Create Design Principles for Innovative Ideas”, and WP 14 “Implement Research Findings”. While WP 6 and WP 7 run the duration of the project, the other WPs run for overlapping sub-year time periods.

Major milestones are in M12 when the living systems simulation describing the innovation journey from ideation to market saturation is completed, M24 when the interaction of the simulation and specific ideas will be mathematically complete, M33 when the validation phase completes and M36 when the implementation phase completes.

While starting in M1, WP 6 will commence delivering curriculum modules to project participants at the latest in M13 and complete by M33.

WP 7 plays a unique role in that it leverages current network activities of the project members, migrates this to a new space for applied learning and collaboration, and then uses the community as a diffusion of innovation ecosystem in its own right.

WP 5 continuously supports the creation and dissemination of learning deliverables in conferences and journals.

Each WP has clearly defined and measurable results (outputs and outcomes) which will be quality reviewed by WP 3 (and revised accordingly) before release to the next WP.

Each work package addresses specific relevant uncertainties through systematic work to be undertaken and will lead to an individual advancement. As a project, the advancements in each WP will come together to fulfil the fundamental aim of the project.

II.2. Overall project management

Please explain how the consortium will be coordinated and indicate the overall project management arrangements. You should also describe the division of tasks between the partners and the allocation of resources for each activity.

The consortium will be coordinated by a steering committee led by the lead proposer and consisting of all WP managers. The steering committee will meet monthly and capture/circulate meeting minutes to all consortium members. The coordination of WPs is accomplished through monthly meetings led by the work package owner and attended by all work package contributors. Meeting minutes will be captured / circulated to all consortium members.

Decisions at steering committee and project management level are made by 2/3 majority, although project level decisions may be overturned by a steering committee decision and steering committee decisions may be overturned by the administrating Commission officers.

Each meeting will be scheduled on a fixed monthly date/time and the project level meetings will be completed before the steering committee meeting. The standard agenda of each meeting will include (a) review of ongoing and future tasks (b) risk register review, (c) IP register review, (d) project quality, (e) collaboration quality (f) dissemination and exploitation progress (g) career framework progress and (h) escalations to the next higher governance level. WP meetings will commence in M1 and end in M36 regardless of whether the WP has started or finished in order to ensure optimal continuous improvement, pull-forward / move right of tasks as deemed feasible and/or continuous team building.

WP 3 plays a significant role in project management activities in that it not only ensures the quality of project outputs but also ensures the quality of steering committee and WP management meetings. This includes management of relevant remediation activities.

Besides the WP managers and their directly assigned resources a sub-committee of WP supporters will be established as a peer review space which WP managers and their teams will regularly present results to for constructive feedback and guidance.

Further of sub-committees will be established for regular review of (a) project finances (b) mentoring activities and (c) consortium member collaboration quality. Participation, meeting frequency and outputs will be decided by the steering committee at the outset of the project.

An advisory board will be constituted to support WP4 in evaluating the effectiveness of project outcomes and in particular in relation to improvement suggestions to improve these and accelerate their realization.

All project management activities and deliverables will be managed within relevant project management software hosted on the project server. Deliverables intended for publication under Open Education principles will be made available via relevant public hosting platforms (such as Sourceforge for the simulation files).

WP accountability is given to:

- **WP 1 Preparation**. DE, Eurofocus International Consultants Ltd. (Acronym: EF. PIC: 996802071, SME – Innovation Research). Represented by Dr. Oliver Schwabe.
- **WP 2 Management**. DE, Eurofocus International Consultants Ltd. (Acronym: EF. PIC: 996802071, SME – Innovation Research). Represented by Dr. Oliver Schwabe.
- **WP 3 Quality Assurance**. SK, Tuke University (Acronym: TU. PIC: 999839238, Higher Education). Represented by Dr. Anna Nagyova.
- **WP 4 Effectiveness Evaluation**. LV, Riga Technical University (Acronym: RU. PIC: 999920718, Higher Education). Represented by Dr. Atis Kapenieks.
- **WP 5 Dissemination and Exploitation of Results**. PO, University of Lisbon (Acronym: LU. PIC: 949885305, Higher Education). Represented by Prof. Nuno Almeida.
- **WP 6 Create Career Frameworks**. DE, ed-Media (Acronym: EM. PIC: 897137578, SME – Communications & Marketing). Represented by Prof. Bettina Reuter. This WP is support by DE, Hochschule Kaiserslautern (Acronym: KU. PIC: 997739479, Higher Education). Represented by Prof. Christian Thurnes.
- **WP 7 Create Collaboration Community**. IL, Pasher & Associates (Acronym: EP. PIC: 983984394, SME – Consulting). Represented by Dr. Edna Pasher.
- **WP 8 Create Simulation**. DE, Eurofocus International Consultants Ltd. (Acronym: EF. PIC: 996802071, SME – Innovation Research). Represented by Dr. Oliver Schwabe.
- **WP 9 Conduct In-Depth Needs Analysis**. DE, Eurecons Förderagentur GmbH (Acronym: EC. PIC: 905058792, SME – Consulting). Represented by Dr. Andreas Huber.

- **WP 10 Case Studies and Validation**. PO, University of Lisbon (Acronym: LU. PIC: 949885305, Higher Education). Represented by Prof. Nuno Almeida.
- **WP 11 Identify Variables and Game Changers**. IE, National University of Ireland Maynooth (Acronym: MU. PIC: 999901415, Higher Education). Represented by Prof. Brian Donnellan.
- **WP 12 Create Risk and Uncertainty Management Framework**. SK, Tuke University (Acronym: TU. PIC: 999839238, Higher Education). Represented by Prof. Hanna Paciaova
- **WP 13 Create Design Principles for Innovative Ideas**. DE, Technische Universität Berlin (Acronym: BU. PIC: 999986678, Higher Education). Represented by Prof. Franz Dietrich.
- **WP 14 Implement Research Findings**. IT, University of Padova (Acronym: PU. PIC: 999995602, Higher Education). Represented by Prof. Fabrizio Dughiero.

Participating Business Enterprises are:

- DE, Rolls-Royce Germany (Acronym: RRD. PIC: 999945356, Industry – Aerospace). Represented by Andreas Hoessler.
- IE, GB Innovation Ltd. (Acronym: GB. PIC: 897249904, SME – R&D). Represented by Dr. Fiona Sammler.
- IS, Baldani Ltd. (Acronym: BA. PIC: None, SME – Food Manufacturing – Associate Partner). Represented by Erez Dahabani.
- IT, Aristoncavi SPA (Acronym: AC. PIC: 895696255, Industry – Cable Manufacturing – Associate Partner). Represented by Leopoldo Destro.
- PO, Airholding - Embraer Research and Technology Europe (Acronym: AH. PIC: 898696271, SME - Aerospace). Represented by Dr. Ricardo Reis.
- PO, BERD (Acronym: BE. PIC: 912009521, SME – Civil Engineering). Represented by Dr. Antonio Andre.
- PO, Exceuticals (Acronym: EX. PIC: 897313827, SME – Pharmaceuticals). Represented by Dr. Susana Santos.
- SE, Volvo Lastvagnar AB (Acronym: VL. PIC: 998813269, Industry – Automobile). Represented by Robert Wester.
- SK, Ausys Automation Systems (Acronym: AA. PIC: 909013773, SME – Robotics). Represented by Tomáš Gazda.
- TU, Sabanci University (Acronym: SU. PIC: 999856892, Higher Education / Manufacturing). Represented by Prof. Taner Tunc.

Work Package Supporters are:

- CH, (Partner Country), Edelweiss Connect GmbH (Acronym: EW. PIC: 993226069, SME – Consulting). Represented by Dr. Barry Hardy.
- DE, University of Bremen (Acronym: UB. PIC: 999987454, Higher Education). Represented by Prof. Otthein Herzog.
- IN (Partner Country), Impetus Solutions (Acronym: IS. PIC: 896715143, Sub-Contractor, SME – IT Development). Represented by Hema Kumar Villa.
- LT, Kaunas University of Technology (Acronym: UK. PIC: 999844961, Higher Education). Represented by Prof. Dainora Maumevičienė.
- LT, Vilnius University (Acronym: VU. PIC: 999893170, Higher Education). Represented by Raimonda Agne Medeisiene.
- LU, University of Luxembourg (Acronym: UL. PIC: 999878620, Higher Education). Represented by Prof. Peter Plapper.
- USA, (Other Partner Country), Entovation International Ltd. (Acronym: EI. PIC: 897107993, SME – Consulting) –Represented by Lynne Schneider.

II.3. Quality assurance, evaluation and monitoring

Please define the specific quality measures to be put in place, as well as indicators foreseen to verify the outcomes of the project. Explain which mechanisms you intend to use to ensure the monitoring and evaluation of the project, its deliverables, results and outcomes

A dedicated WP will be responsible for creating and implementing a quality plan which will focus on the quality of project deliverables and the overall time, cost and quality of the project. A further dedicated work package will be responsible for monitoring the effectiveness of the outcomes of the project.

This WP creates and implements a quality assurance plan based on selected requirements aligned to ISO 21500. ISO 21500 provides high level description of concepts and processes that are considered to form good practice in project management. Selected requirements of ISO 21500 together with the implemented quality plan will help to assure the quality of project deliverables and project delivery to time and cost. Indicators relevant to the quality of the project deliverables will include formal quality (i.e. assessed against the quality requirements of academic journal submissions) and suitability for easily understanding and use by the target groups, especially those considered to be late adopters. Mechanisms intended for use include a peer review process before deliverables are made publicly available and the inclusion of quality reviews in the agendas of steering and work package level governance. Indicators relevant to the effectiveness of the outcomes of the project will be detailed in a reporting dashboard considering both financial and intangible knowledge flows. Mechanisms intended for use include surveys and semi-structured interviews with project partners.

Indicators relevant to the quality of the project deliverables will include formal quality (i.e. assessed against the quality requirements of academic journal submissions) and suitability for easily understanding and use by the target groups, especially those considered to be late adopters. Mechanisms intended for use include a peer review process before deliverables are made publicly available and the inclusion of quality reviews in the agendas of steering and work package level governance.

Indicators relevant to the effectiveness of the outcomes of the project will be detailed in a reporting dashboard considering both financial and intangible knowledge flows. Mechanisms intended for use include surveys and semi-structured interviews with project partners.

The steering committee and work package owners will furthermore place special emphasis on the quality of collaboration of project partners and the quality of interactions in the community of applied learning and collaboration. Quality in this respect will be understood as the actual and desired value of collaboration network indicators related to the diffusion of innovation model existent in the project and which will be regularly assessed (i.e. cohesiveness, reciprocity, and density). Measurement of these indicators will occur through quantitative assessment of data gathered from the platform supporting the community of applied learning and collaboration.

II.4. Recognition and validation

If appropriate to the type of project activities, please explain the approaches that are or will be used for the validation and recognition of learning outcomes, in line with the European transparency and recognition tools and principles.

The career framework will be based on a curriculum offering a vocational, higher education and continuous professional development solution for all levels of experience. The curriculum will align to the European transparency and recognition tools and principles (see https://ec.europa.eu/social/main.jsp?catId=1217&langId=en).

Based on the European Qualifications Framework (see http://ec.europa.eu/social/BlobServlet?docId=15686&langId=en) initial considerations expect the vocational solution to align to EQF level 3, the higher education solution to align to EQF level 5 and the continuous professional development solution to align to EQF level 4. Formal assessment and sanctioning of the EQF levels will be sought respecting that national qualification frameworks may differ.

The higher education solution will be submitted for assessment under the European Credit and Transfer System (see https://ec.europa.eu/education/resources-and-tools/european-credit-transfer-and-accumulation-system-ects_en). The vocational solution will be submitted for assessment under the European Credit System for Vocational Education and Training.

In respect to the validation of non-formal and informal learning the project will and consider examine relevant recommendations of the Commission (see https://eur-lex.europa.eu/legal-content/EN/TXT/?uri=celex:32012H1222(01).

II.5. Budget and cost-effectiveness

Please describe the measures adopted to ensure that the proposed results and objectives will be achieved in the most cost-effective way and in time. Explain the principles of budget allocation between the partners. Indicate the arrangements adopted for financial management.

The foundation of budgeting is the working days required in order to complete project tasks and results. WP ownership was negotiated based on the skills, capabilities, organizational requirements and interests of the project participants. The project tasks and results have been estimated in collaboration with the WP owners and their commitment in principle achieved. Final commitments are to be negotiated upon funding agreement and following final confirmation of participation, readiness and capabilities. Budget allocation is determined by the agreed number of working days per WP and the unit cost rates of the Programme. No learning mobility activities are expected. Overarching WPs needed to complete the project successfully dominate the budget assignments.

- Since the aim of the project is the creation and piloting of a career framework this WP has the highest implementation budget allocation of approximately 23%.
- In order to enable wide and rapid dissemination of the career framework 12 universities in 11 countries and 9 business enterprises in 7 countries represent the core of the consortium. This relatively large knowledge alliance consortium requires a high degree of management / coordination effort thus leading to this WP being the second largest with approximately 14% of the implementation project budget and the highest proportion of the travel/subsistence budget. This WP also includes travel/subsistence for 4 project team meetings in Lisbon in Q1 of year 1 (launch event), Padova in Q2 of year 2, Maynooth in Q2 of year 3 and Lisbon in Q4 of year 3 (closing event.
- The creation of the collaboration community and effectiveness evaluation are the next most budgeted overarching WP with approximately 8% of the implementation budget. Since this is focused on the digital community building the travel/subsistence budgets are minimal.
- WPs that do not run for the duration of the project are scaled appropriately to achieve the most balanced approach feasible.
- Six organizations with intermediary functions between higher education and business function as “gearboxes” enabling the creation and implementation of the career framework.
- One international partner will ensure that the career framework enables global competitive advantage.

Where feasible budgets have been assigned to organizations from countries with the lowest unit cost rates. Furthermore every WP has been assigned not only a WP leader but also support from all other project participants in order to ensure a diverse set of views and a flexible resource pool / buffer which can be managed to accommodate risks and uncertainties as they arise.

Key cost distribution metrics are:

WP	Sum Work Day Cost	Sum Travel & Subsistence	SUM Implementation	Overall % of Total Budget
1 Preparation	€25,662	€3,000	€ 29,825	3%
2 Management (incl. 4 team meetings)	€76,750	€64,041	€ 140,792	14%
3 Quality Assurance	€41,858	€1,500	€ 43,358	4%
4 Effectiveness Evaluation	€35,498	€1,500	€ 36,998	4%
5 Dissemination and Exploitation	€51,616	€1,500	€ 53,116	5%
6 Create Career Framework	€215,118	€15,00	€ 230,118	23%
7 Create Collaboration Community	€70,620	€0	€ 70,620	7%
8 Create Simulation	€65,214	€16,000	€ 81,214	8%
9 In-Depth Needs Analysis	€47,546	€1,500	€ 49,046	5%
10 Case Studies and Validation	€38,443	€6,000	€ 44,443	4%
11 Identify Variables and Game Changers	€74,150	€9,000	€ 83,150	8%
12 Create Risk and Uncertainty Management Framework	€34,202	€1,500	€ 35,702	4%
13 Create Design Principles for Innovations	€45,248	€6,500	€ 51,748	5%
14 Validate Research Findings	€34,662	€16,000	€ 50,662	5%

Sum	**€856,587**	**€133,000**	**€1,000,000**	**100%**

Target Group	Sum Cost	% Total Budget
Higher Education	€361,397	36%
Manufacturing Organizations	€21,192	2%
Manufacturing Intermediary	€616,815	62%

Participating manufacturing organizations neither receive nor provide funding, but contribute at least 8o staff hours annually.

Project materials will only be provided in English.

PART III. Quality of the partnership, the team and the cooperation arrangements

III.1. Knowledge Alliances: composition of the consortium

Organisations (please use the same numbering both in the eForm and in the Excel budget table)			**Higher Education Institution (HEI)**	**Enterprises**			**Other organisation types**									
Nr	**Partner Acronym**	**APP (applicant) or PAR (partner) or AE (Affiliated Entity) or AssPAR (associated partner)**	HEI (tertiary level - ECHE holder if in a Programme Country)	Small and medium sized enterprise	Large enterprise	Social enterprise	EU-wide network	Social partner or other representa-tive of working life[1]	Research Institute /Centre	Non-govern-mental organisa-tion/asso-ciation	School/ Institute/ Educatio-nal centre – Vocational training	School/ Institute/ Educatio-nal centre – Adult education	National, regional, local public body	Accredita-tion, certifica-tion or qualifica-tion body	Counsel-ling body	Internatio-nal organisa-tion under public law
1	**EF**	**APP**		**X**												
2	**TU**	**PAR**	**X**													
3	**RU**	**PAR**	**X**													
4	**UL**	**PAR**	**X**													
5	**EM**	**PAR**								**X**						
6	**EP**	**PAR**		**X**												
7	**EC**	**PAR**		**X**												
8	**MU**	**PAR**	**X**													
9	**BU**	**PAR**	**X**													
10	**PU**	**PAR**	**X**													
11	**KU**	**PAR**	**X**													
12	**GB***	**PAR**		**X**												
13	**LU**	**PAR**	**X**													
14	**AH**	**PAR**		**X**												
15	**BE**	**PAR**		**X**												
16	**EX**	**PAR**		**X**												
17	**AA**	**PAR**		**X**												

[1] E.g. chambers of commerce, trade union, intermediary, sectorial representation, etc.

Organisations (please use the same numbering both in the eForm and in the Excel budget table)			**Higher Education Institution (HEI)**	**Enterprises**			**Other organisation types**									
Nr	**Partner Acronym**	**APP (applicant) or PAR (partner) or AE (Affiliated Entity) or AssPAR (associated partner)**	HEI (tertiary level - ECHE holder if in a Programme Country)	Small and medium sized enterprise	Large enterprise	Social enterprise	EU-wide network	Social partner or other representa-tive of working life[1]	Research Institute /Centre	Non-govern-mental organisa-tion/asso-ciation	School/ Institute/ Educatio-nal centre – Vocational training	School/ Institute/ Educatio-nal centre – Adult education	National, regional, local public body	Accredita-tion, certifica-tion or qualifica-tion body	Counsel-ling body	Internatio-nal organisa-tion under public law
18	**SU****	**PAR**	**X**													
19	**EW**	**PAR**		**X**												
20	**UB**	**PAR**	**X**													
21	**IS*****	**PAR**		**X**												
22	**UK**	**PAR**	**X**													
23	**VU**	**PAR**	**X**													
24	**RR**	**PAR**			**X**											
25	**EI******	**PAR**		**X**												
26	**VL**	**PAR**			**X**											
27	**AC**	**PAR**			**X**											
28	**BA********	**PAR**		**X**												

* GB (GB Innovation Ltd) is a manufacturing intermediary and participating as a SME manufacturing business representative

** SU (Sabanci University) is an institute of higher education and participating primarily as a business representative with a specific manufacturing innovation

*** IS (Impetus Solutions) is an IT development company subcontracted for IT specific development and infrastructure management

**** EI (Entovation International) is a global research network located in the USA and involved to ensure global benchmarking of project efforts

***** BA (Baladi Ltd) is a manufacturing business which will be represented by EP

Does your consortium include any affiliated entities (please choose YES or NO)? If yes, please fill the information in the Annex of this document.

In accordance with Art. 122 of the Financial Regulation. The following can be considered affiliated entities:

- legal entities having a legal or capital link with beneficiaries; this link is neither limited to the action nor established for the sole purpose of its implementation.
- several entities which satisfy the criteria for being awarded a grant and together form one entity which may be treated as the sole beneficiary, including where the entity is specifically established for the purpose of implementing the action.

The affiliated entities must comply with the eligibility and non-exclusion criteria, and where applicable also with the selection criteria applying to applicants.

☐ **YES**
X NO

III.2. Rationale for setting-up the partnership

Please explain why the partners are best suited to participate in this European project. Describe skills, expertise and competences within the partnership directly relating to the planned project activities.

Consortium partners are members in the Open European Network for ENTerprise InnOVation in High Value Manufacturing (see www.innovation-web.eu and https://www.linkedin.com/groups/8779542/) which was formed in April 2019 and the majority have previously collaborated to submit the COST funding proposal "Open European Network for ENTerprise InnOVation in High Value Manufacturing" Proposal Reference OC-2019-1-23678 in September 2019 (see https://cdn.website-editor.net/9374fbbd760f4d8bab0bf6287f5f6932/files/uploaded/OC-2019-1-23678_FULLPROPOSAL_PROPOSER%2520%2528FINAL%252020190828%2529.pdf). As a functioning network they are best suited to participate not only due to the depth of relevant domain knowledge, but also due to the high quality of their collaborative relationships and diverse nature.

- Dr. Schwabe (EF / WP 1, WP 2 and WP 8) has been instrumental in developing and implementing all layers of the planned simulation over the past 20 years. He has led a multitude of business projects of varying sizes and complexity in collaboration with a larger number of different global organizations, including ownership of work packages in diverse EU funded research projects.
- Prof. Paciaova (TU / WP 12) and Dr. Nagyova (TU / WP 3) have been leading domain relevant research departments for many years with participation in multiple relevant EU funded research projects across various high value manufacturing industries.
- Dr. Kapenieks (RU / WP 4) has over 40 years experience in working with EU funded projects at all levels in multiple high value manufacturing industries and in particular supporting project effectiveness evaluations.
- Prof. Almeida (UL / WP 5 and WP 10) leads a relevant research department and has over 10 years experience in working on EU funded research projects in the high value manufacturing industry with an emphasis on public infrastructure / construction.
- Prof. Reuter (EM / WP 6) leads a non-profit association and Innovation Management MBA program with a focus on motor sports. Working with multiple high value manufacturing organizations the organization has been specialized for many years in the development and implementation of learning resources at varying levels.
- Dr. Pasher (EP / WP 7) and her team have over 40 years of experience participating in various collaboration focused (EU funded) research projects.
- Dr. Huber (EC / WP 9) and his team have been participating in a multitude of EU funded research projects for over 10 years in a variety of roles with a special emphasis on needs analysis.
- Prof. Donnellan (MU / WP 11) and his team have been participating in a multitude of EU funded research projects for over 30 years in a variety of roles with a special emphasis on principle investigator activities.
- Prof. Dietrich (BU / WP 13) heads up a research department with focus on manufacturing technologies in high value manufacturing industries and has participated in a multitude of EU funded research projects in various roles over the past 10 years.
- Prof. Dughiero (PU / WP 14) heads up a research department with focus on manufacturing technologies in high value manufacturing industries and has participated in a multitude of EU funded research projects in various roles over the past 20 years.
- Prof. Thurnes (KU / WP 15) heads up a research department with focus on structured ideation with an emphasis in high value manufacturing industries and has participated in a multitude of EU funded research projects in various roles over the past 20 years.
- Dr. Sammler (GB) and Mr. de Man (VD) are consulting service providers with unique products supporting multiple business organizations in the high value manufacturing industry. Prof. Tunc (SU) brings a unique manufacturing technology as innovation case study to the project. They are participating as business organizations in their own right.
- Dr. Reis (AH), BE, Dr. Andre (BE), Dr. Santos (EX), and Mr. Gazda (AA) represent manufacturing focused business organizations contributing case studies to the project.
- Dr. Hardy (EW), Prof. Herzog (UB), Prof. Maumevičienė (UK), VU, Mrs. Medeisiene (VU) and Prof. Plapper (UL), support all work packages with intensive expertise in diverse work package themes.
- Mr. Villa (IS), is a sub-contracted IT solutions provider with over 30 years experience and over 15 years collaboration experience with EF. IS has been instrumental in developing previous network based simulations.
- Mrs. Schneider (EI), represents a USA based global think tank active in the innovation space for over 40 years with the ability of global benchmarking in respect to diffusion of innovation case studies.

III.3. Description of the consortium members

III.3.1. Partner number – P1 – Eurofocus International Consultants Ltd.

Organisation name	Country
Eurofocus International Consultants Ltd	**Germany**

III.3.1.1. Aims and activities of the organisation

Eurofocus International Consultants Ltd ("Eurofocus") is a SME consulting organization focused on creating and facilitating collaboration networks across broad ranges of diverse participants with a focus on accelerating the speed of diffusion of innovations from ideation to market saturation in high value manufacturing. Eurofocus is owner-led and has one employee, with an IT development team in India it has worked with for many years. The owner has researched and published widely while holding teaching positions at multiple US and European universities. The current key activity of Eurofocus is the creation and facilitation of the "Open European Network for ENTerprise InnOVation in High Value Manufacturing" (ENTOV-HVM). Eurofocus is affiliated with the global innovation think-tank Entovation Ltd (see www.entovation.com). Eurofocus activities build on two decades of work in joint-ventures with various partners such as Verna Allee Associates, Value Networks LLC, the Proof of Value Network and Entovation which, through work with many organizations globally has resulted in a large spectrum of tools, techniques and methods suited for fast and effective creation and facilitation of collaboration networks. In particular Eurofocus has been instrumental to the development of an advanced network analysis and visualization tool provided as a software-as-a- service which is pending re-activation in 2020. Website: www.innovation-web.eu.

III.3.1.2. Role of the organisation in the project

The applicant organisation manages and supports a variety of WPs and tasks as follows:

Manages:

- WP1. Preparation
- WP2. Management
- WP8. Create Simulation

The organization will furthermore intensively support all other WPs in a variety of roles.

The applicant organization is accountable for the delivery of the overall project to time, cost and quality.

III.3.1.3. Operational/Technical capacity: Skills and expertise of key staff involved in the project

Names of the staff members	*Summary of relevant skills and experience, including where relevant a list of recent publications related to the domain of the project.*
Dr. Oliver Schwabe	Highly experienced business (value) network strategist with a wide range of academic and industrial experience in the ideation, design, development and implementation of change processes in multiple industries. Deeply skilled weaver of the relationship patterns fundamental to making change work across the social, organizational and technological interfaces of extended supply chains and supply networks. Most recent publications related to the domain of the project: • Schwabe, O. Schneider, L. Almeida, N. Salvado, A.F. (2019) A Framework for Accelerating Innovation through Innovation Webs. Sustainability and Automation in Smart Constructions: Proceedings of the International Conference on Automation Innovation in Construction (CIAC-2019), Leiria, Portugal. Rodrigues, H., Gaspar, F.,

Names of the staff members	*Summary of relevant skills and experience, including where relevant a list of recent publications related to the domain of the project.*
	Fernandes, P., Mateus, A. (Eds.). Springer eBook on Advances in Science, Technology & Innovation (in press) • Schwabe, O. (2018) A Geometrical Framework for Forecasting Cost Uncertainty in Innovative High Value Manufacturing. PhD Thesis, Cranfield University • Schwabe, O., Shehab, E., Erkoyuncu, J.A. (2016) A Framework for Early Life Cycle Visualisation, Quantification and Forecasting of Cost Uncertainty in the Aerospace Industry. Journal Progress in Aerospace Sciences, 84, pp. 29-47. • Schwabe, O., Shehab, E., Erkoyuncu, J.A. (2015) Uncertainty Quantification Metrics for Whole Product Life Cycle Cost Estimates in Aerospace Innovation. Journal Progress in Aerospace Sciences, 77, pp. 1-24. • Allee, V., Schwabe, O. (2015) Value Networks and the True Nature of Collaboration. Meghan-Kiffer Press, ISBN-10: 0929652525 • Allee, V., Schwabe, O. (2009) Measuring the Impact of Research Networks in the EU: Value Networks and Intellectual Capital Formation. European Conference on Intellectual Capital, Haarlem, The Netherlands, April 28-29, 2009, Conference Proceedings. • Allee V., Innocenti, A., Koumpis, S., Mavridis, A., Molinari, F., Pasher, E., Shachar, S., Schwabe, O., Tektonidis, D., Tresman, M, Vontas, A. (2007) Effectiveness of ICT RTD Impacts on the EU Innovation System: Annex to the Final Report. Evaluation Study for the European Commission, DG Information Society and Media Directorate C Lisbon Strategy and Policies for the Information Society, Unit C3 – Evaluation and Monitoring

III.3.2. Partner number – P2 – Tuke University

Organisation name	Country
Tuke University	**Slovakia**

III.3.2.1. Aims and activities of the organisation

The Technical University of Kosice (TUKE) was established in 1952, with the aims to satisfy the needs of Eastern Slovakia in education and research. The content of education and research at TUKE includes the entire complex of sciences and arts. Today, TUKE has 9 different faculties: Faculty of Mining, Ecology, Process Control and Geotechnology, Faculty of Materials, Metallurgy a Recycling, Faculty of Mechanical Engineering, Faculty of Electrical Engineering and Informatics, Faculty of Civil Engineering, Faculty of Economics, Faculty of Manufacturing Technologies with a seat in Presov, Faculty of Arts, and Faculty of Aeronautics. The number of students currently attending nine TUKE Faculties exceeds 16,000. Approximately 13,000 of them are full-time students, out of which there are 8,500 Bachelor students, 4,000 Master students and over 500 PhD students. The department of Safety and Quality of Production (as a part of Faculty of mechanical Engineering) was established in 2001 and since then has been focusing on the education and research in three scientific disciplines. Safety area deals mainly with the safety management of technical systems, application of risk assessment of major hazard accidents and Occupational Health and Safety problematics. In the area of Production quality, it focuses on process management and improvement, implementation and integration of management systems. As for Maintenance management, it is mainly the implementation of TPM and RCM methods in practice. The common characteristic of all three scientific areas is their synergy based on risk management. Website: http://www.tuke.sk/

III.3.2.2. Role of the organisation <u>in the project</u>

The organisation manages and supports a variety of WPs and tasks as follows:

Manages:

- WP3. Quality Assurance
- WP12. Create Risk and Uncertainty Reduction Framework

The organization will also support WP4 (Effectiveness Evaluation) to ensure improvements to project deliverable quality are identified and fed back to those accountable for product deliverables. This supportive role aims at leveraging the combined expertise of project participants for maximising quality and implementation effectiveness. This approach is based on the paradigm of "wisdom of the crowds" (https://en.wikipedia.org/wiki/The_Wisdom_of_Crowds). The relevant peer review process will be managed by the owner of WP4 accordingly. The peer review process will be highly scripted and will be mandatory before official closure of the related tasks. Creating the review script is a task the owner of WP4. The project participants accountable for the results will provide such to a peer review panel and then discuss them in an online conference. The responsibility of the peer review panel will be to use the separately prepared review script to assess the deliverables bevor the conference. The peer reviewers will also join project team events, participate in the regular monthly quality and effectiveness review meetings, and support dissemination efforts. At all times, peer reviewers will be accountable for demonstrating effort made / time spent, attending governance and review meetings, and continuously provide high quality improvement suggestions.

III.3.2.3. Operational/Technical capacity: skills and expertise of key staff involved in the project

Names of the staff members	*Summary of relevant skills and experience, including where relevant a list of recent publications related to the domain of the project.*
Prof. Hana Pacaiova, PhD.	Full time professor and Deputy Head of the Department of Safety and Quality at Faculty of Mechanical Engineering, Technical University of Kosice. She obtained her degree as a professor in 2003 at Technical University of Kosice, in the field Safety of Technical Systems. Her professional orientation is focused on Occupational safety and health issues, Risk Assessment – tools, Machinery safety, Safety management systems, SQAS assessment, Maintenance management (RCM, TPM), Project management. She is a member of of many research bodies (i.e. Supervisory board Slovak Maintenance Society, Member of Board Slovak Diagnostic Association, Member of Accreditation commission Slovak National Labor Inspectorate, Member of European Health and Safety Committee (EFNMS)). She is also a board member of the international conference AHFE, USA. She is author and co – author of more than 270 papers, includes 21 education books and publication. Her worldwide experience are linked also with international projects (i.e. Twinning Adviser in successful project in Czech Republic (Strengthening of Labor Inspection Administration, 2007) and Enlargement Action Plan (New members of Topic Center - Bilbao, 2005, 2004)). She was also task leader for project iNTegRisk (7FP). Her practical experience are linked with many cooperation with industry and several national researches and projects granted by European structural funds. Most recent publications related to the domain of the project: • Development of GRAM - A risk measurement tool using risk based thinking principles / H. Pačaiová, J. Sinay, A. Nagyová - 2017. In: Measurement. Vol. 100 (2017), p. 288–296. - ISSN 0263-2241 Available at: http://www.sciencedirect.com/science/article/pii/S0263224117300040. • An effective model for the quality of logistics and improvement of environmental protection in a cement plan / Dušan Malindžák, Andrzej Pacana, Hana Pačaiová - 2017. In: Przemysl Chemiczny. Vol. 96, no. 9 (2017), p. 1958-1962. - ISSN 0033-2496 • Maintenance management as a basic tool for safety prevention / Hana Pačaiová - 2009.In: Kolloquien zum Qualitätsmanagement. No. 3 (2009), p. 65-70. - ISSN 1611-6267 • Human reliability in maintennace task / Hana Pacaiova - 2010.In: Frontiers of Mechanical Engineering in China. Vol. 5, no. 2 (2010), p. 184-188. - ISSN 1673-3479 • Safety and risk philosophy in maintenance management / Hana Pacaiova - 2010. - 1 elektronický optický disk (CD-ROM).In: Applied Human Factors and Ergonomics (AHFE) : 3rd International Conference : 17-20 July 2010, Miami, Florida USA. - S.l. : USA Publishing, 2010 P. 1-9. - ISBN 978-0-9796435-4-5
Dipl. Ing. Anna Nagyova, PhD.	She is a senior lecturer and internal auditor for quality management system (QMS) at Technical University of Kosice. She is the holder of many certificates, from different area (i.e. Ms Project – basics, Project management, Personal management, Information and communication technologies). She was team member of several different projects:

Names of the staff members	*Summary of relevant skills and experience, including where relevant a list of recent publications related to the domain of the project.*
	Implementation of QMS, Implementation of BBS in Whirlpool, Slovakia, 7FP international project, 3 national projects and 5 projects from structural funds. Most recent publications related to the domain of the project: • Development of GRAM - A risk measurement tool using risk based thinking principles / H. Pačaiová, J. Sinay, A. Nagyová - 2017.In: Measurement. Vol. 100 (2017), p. 288–296. - ISSN 0263-2241 available at: http://www.sciencedirect.com/science/article/pii/S0263224117300040. • Systematic approach in maintenance management improvement / Hana Pacaiova ... [et al.] - 2013.In: International Journal of Strategic Engineering Asset Management. Vol. 1, no. 3 (2013), p. 228-237. - ISSN 1759-9733 • An Empirical Study of Root-Cause Analysis in Automotive Supplier Organisation / Anna Nagyová ... [et al.] - 2019.In: Kvalita Inovácia Prosperita = Quality Innovation Prosperity. - Košice (Slovensko) : Nadácia Q-Impulz Roč. 23, č. 2 (2019), s. 34-45 [print]. - ISSN 1335-1745 Spôsob prístupu: http://qip-journal.eu/index.php/QIP/article/view/1243/1128. • Methodic of Quality Control Evaluation in research Projects / Anna Nagyová, Hana Pačaiová - 2013.In: 16th QMOD-ICQSS Proceedings : Quality Management and Organizational Development Conference : 4th - 6th September 2013, Portorož, Slovenia. - Maribor : University of Maribor, 2013 P. 1295-1306. - ISBN 978-961-232-269-4 • Risk management as a common aspect of management systems / Hana Pacaiova, Stefan Markulik, Anna Nagyova - 2016.In: QMOD-ICQSS Conference. - Lund : University Library Press, 2016 P. 639-652. - ISBN 978-91-7623-086-2
RNDr. Zuzana Kimakova, PhD.	She is a senior lecturer of Department of applied mathematics and informatics, on Faculty of Mechanical Engineering of TUKE, where she works as lecturer of mathematics courses for gradual and post-gradual programs. She also participates in research and development, focusing on application of mathematical methods, mainly in field of statistics analysis. She participated in research and development of 5 VEGA projects, 1 KEGA project, and 1 project APVV. She is an author and co –author of 1 scientific paper in accredited foreign scientific journal, 15 papers in foreign and 12 papers in domestic journals. She is also co-author of 4 university textbooks, 9 coursebooks. Most recent publications related to the domain of the project: • KNEŽO, Dušan - ANDREJIOVÁ, Miriam - KIMÁKOVÁ, Zuzana - RADCHENKO, Svetlana: Determining of the optimal device lifetime using mathematical renewal models - 2016. In: TEM Journal. Vol. 5, no. 2 (2016), p. 121-125. - ISSN 2217-8309 • ANDREJIOVÁ, Miriam - KIMÁKOVÁ, Zuzana - PIŇOSOVÁ, Miriama - KRÁLIKOVÁ, Ružena: Application of Multidimensional Statistical Methods for the Air Quality Evaluation in the Vicinity of a Strategic Plant - 2016. In: The Holistic Approach to Environment. Vol. 6, no. 3 (2016), p. 105-118. - ISSN 1848-0071
RNDr. Miriam Andrejiova, PhD.	She graduated in 1997 at Faculty of Science at Pavol Jozef Šafárik University in Košice in field of mathematics and physics. She obtained her postgraduate degrees in „Theory of Physics Teaching" at Faculty of Science at University of Pavol Jozef Šafárik in Košice. Since 1998 she has worked as assistant at Department of Applied Mathematics and Informatics at Faculty of Mechanical Engineering, Technical University in Košice. She is an author or co-author of two monographs, university textbooks and many scientific publications aimed at applying mathematical and statistical methods in practice. Most recent publications related to the domain of the project: • ANDREJIOVÁ, Miriam - GRINČOVÁ, Anna - MARASOVÁ, Daniela: Measurement and simulation of impact wear damage to industrial conveyor belts. In: Wear. Vol. 368 (2016), p. 400-407, ISSN 0043-1648.(vdatabáze CurrentContents) • ANDREJIOVÁ, Miriam - GRINČOVÁ, Anna: Classification of impact damage on a rubber-textile conveyor belt using Naive-Bayes methodology.In: Wear. Vol.414-415 (2018), p. 59-67.(vdatabáze CurrentContents)

Names of the staff members	*Summary of relevant skills and experience, including where relevant a list of recent publications related to the domain of the project.*
	• ANDREJIOVÁ, Miriam - GRINČOVÁ, Anna - MARASOVÁ, Daniela: Failure analysis of the rubber-textile conveyor belts using classification model.In: Engineering Failure Analysis. č. 101 (2019), p. 407-417, ISSN 1350-6307.(vdatabáze CurrentContents)
Dipl. Ing. Tomas Stejskal, PhD.	He is associate professor at Faculty of Mechanical engineering. His areas of interest are technical diagnostics (vibrodiagnostics), machine maintenance, machine design and methodology or philosophy of technical creativity. He is also interested in the consistency of modern physics and mathematics. Currently he teaches modelling in CAD systems and design of production machines. Most recent publications related to the domain of the project: • Stejskal, T. et al. Specific principles of work area stiffness measurement applied to a modern three-axis milling machine. The International Journal of Advanced Manufacturing Technology, 2019, 102.5-8: 2541-2554. • Stejskal, T., et al. Measurement of Maximum Deviation from Roundness Based on the Inverse Kinematics Principle. Measurement Science Review, 2019, 19.6: 271-278. • Stejskal, T., et al. Measurement of static stiffness after motion on a three-axis CNC milling table. Applied Sciences, 2018, 8.1: 15. • Stejskal, T., et al. Elimination of thermal drift in measuring the positioning accuracy of a three axis milling machine. Advances in Science and Technology Research Journal, 2017, 11.
Assos. prof. Renata Turisova, PhD.	She is associate professor at Faculty of Mechanical Engineering, Department of safety and quality. Professional orientation or specialization: integrated management with focus on quality and safety, statistical and quantitative methods in quality, management and marketing. 163 publications. Most recent publications related to the domain of the project: • Increasing the accuracy of the FMEA method / Renáta Turisová, Jaroslava Kádárová - 2015.In: Investment Management and Financial Innovations. Vol. 12, no. 4 (2015), p. 176-186. - ISSN 1810-4967 • Ergonomics versus product attractiveness / Renata Turisova, JurajSinay - 2017.In: Theoretical Issues in Ergonomics Science. Vol. 18, no. 1 (2017), p. 1-13. - ISSN 1464-536X • Proposal of performance assessment by integration of two management tools / JaroslavaKádárová, JozefMihok, Renáta Turisová - 2013.In: Quality Innovation Prosperity. Roč. 17, č. 1 (2013), s. 88-102. - ISSN 1335-1745 Available at: http://www.qip-journal.eu/index.php/QIP/article/view/143/145.
Prof. Jozef Svetlik, PhD.	He is a full time professor at the Department of Production Machinery, Faculty of Mechanical Engineering, Technical University of Kosice. His activity is focused on Design of Modular Manufacturing Equipment, CAD-supported Design and Engineering Methodology, Industrial Design. He was a member of international projects: Universities as engines of knowledge society development, Research of a new generation of materials, constructions and technologies for the 21st century industry also head of and member of several national projects. Most recent publications related to the domain of the project: • Virtual prototyping of machine tools / Peter Demeč, Jozef Svetlík - 1. vyd - Lüdenscheid : RAM-Verlag - 2017. - 156 p. - ISBN 978-3-942303-61-3. • Numerical Calculation of Oil Dispersion through the Air Flow Applied to the Inner Surface of Slim Tubes / Jozef Svetlík ... [et al.] - 2019. In: Applied Sciences. - Basel (Švajčiarsko) : Multidisciplinary Digital Publishing Institute Roč. 9, č. 12 (2019), s. 1-19 [online]. - ISSN 2076-3417 • Measurement of static stiffness after motion on a three-axis CNC milling table / Tomáš Stejskal ... [et al.] - 2018. In: Applied Sciences - Basel. Vol. 8, no. 1 (2018), p. 1-17. - ISSN 2076-3417

Names of the staff members	*Summary of relevant skills and experience, including where relevant a list of recent publications related to the domain of the project.*
	• Film thickness estimation for the oil applied to the inner surface of slim tubes / Jozef Svetlík ... [et al.] - 2017. In: Applied Sciences. Vol. 7, no. 10 (2017), p. 1-15. - ISSN 2076-3417 • Research into oil film coating of a steel pipe interior by oil mist blowing / J. Svetlík ... [et al.] - 2018. In: Metalurgija. Vol. 57, no. 1-2 (2018), p. 95-98. - ISSN 0543-5846
Prof. Milan Oravec, PhD.	He is a full time professor at the Department of Safety and Quality Production, Faculty of Mechanical Engineering, Technical University of Kosice. Milan is a member of several scientific councils and trade unions. Within the framework of scientific and professional activities, he focuses on safety, especially in the fields of engineering, chemistry, petrochemistry and critical infrastructure. The publication activity as well as UV and PP are on the TUKE library website. At present, he addresses the causality of phenomena in energy fields representing phenomena in engineering, electrical engineering, including processes in I4. He solved approximately 150 technical tasks for practice based on economic activity. He is a specialist in the prevention of major industrial accidents and a member of an expert committee at the Ministry of the Environment of the Slovak Republic within the Commission for the Prevention of Serious Industrial Accidents. In the Czech Republic, in several CoR research institutions, e.g. SUJCHBO. He is currently developing relations with Instytut Techniczny Wojsk Lotniczych (ITWL) Warszawa in the field of mapping phenomena in energy, aviation through magnetic fields. Most recent publications related to the domain of the project: • Image Encryption Algorithm with Plaintext Related Chaining / Ľuboš Ovseník ... [et al.] - 2019.In: Computing and Informatics : Computers and Artificial Intelligence. - Bratislava (Slovensko) : Ústav informatiky Roč. 38, č. 3 (2019), s. 647-678 [print]. - ISSN 1335-9150 • Influence of the working environment on safety and health protection at work and of the employees in an office space / Milan Oravec, Michaela Balážiková, Marianna Tomašková - 2018.In: Science. Business.Society. Vol. 3, no. 3 (2018), p. 115-121. - ISSN 2367-8380 • Experimental measurements of low-frequency magnetic fields in terms of safety / Milan Oravec ... [et al] - 2016.In: MM Science Journal. Vol. 2016, no. October (2016), p. 1066 - 1072. - ISSN 1803-1269 • Extra low frequency magnetic fields of welding machines and personal safety / Hana Pačaiová ... [et al.] - 2018.In: Journal of Electrical Engineering. Roč. 69, č. 6 (2018), s. 493-496 . - ISSN 1335-3632 • Modification of procedure to initiate the solids according to EN 60695-2-10 for materials used in historic buildings / Andrea Majlingová ... [et al.] - 2013.In: European Journal of Environmental and Safety Sciences. Roč. 1, č. 1 (2013), s. 8-12. - ISSN 1339-472X
Dipl. Ing. Juraj Glatz, PhD.	He is a researcher at the Department of Safety and Quality of Production, Faculty of Mechanical Engineering, Technical University of Košice. His activity is focused on major industrial accidents, explosion prevention in industry, risk assessment, occupational health and safety, road tunnels safety and risks in the context of Industry 4.0. He was a member of international project 7. RP iNTeg-Risk Early Recognition, Monitoring, and Integrated Management of Emerging, New Technology related Risks and also member of several national projects. Most recent publications related to the domain of the project: • Maintenance management system / Hana Pačaiová, Juraj Glatz - 2015. In: MM Science Journal. October (2015), p. 665-669. - ISSN 1805-0476 Spôsob prístupu: http://www.mmscience.eu/october-2015.html... • The application of magnetic materials for a neodymium-based thermal fuse in sprinklers / Michal Hovanec, Michal Gorzás, Juraj Glatz - 2016. In: Production Management and Engineering Sciences. - Leiden : CRC Press, 2016 P. 79-83. - ISBN 978-1-138-02856-2 Available at: http://www.scopus.com/record/display.uri?eid=2-s2.0-84949845079&origin=resultslist&sort=plf-f&src=s&...

Names of the staff members	*Summary of relevant skills and experience, including where relevant a list of recent publications related to the domain of the project.*
	• Oil tank fire modeling for the purposes of emergency planning / Juraj Glatz, Michal Gorzás, Michal Hovanec - 2016. In: Production Management and Engineering Sciences. - Leiden : CRC Press/Balkema, 2016 P. 73-77. - ISBN 978-1-138-02856-2 Available at: http://www.scopus.com/record/display.uri?eid=2-s2.0-84949895138&origin=resultslist&sort=plf-f&src=s&... • Analysis of low frequency magnetic fields generated during welding / Juraj Glatz, Michal Gorzás, Zuzana Kotianová - 2017. In: MM Science Journal. Vol. 2017, no. December (2017), p. 2046-2049. - ISSN 1803-1269 • Risk management in context of Industry 4.0 / Juraj Sinay, Zuzana Kotianová, Juraj Glatz - 2018. In: Industry 4.0 : an International Scientific Journal. Roč. 3, č. 6 (2018), s. 340-342 [print]. - ISSN 2534-8582
RNDr. Zuzana Kotianová, PhD.	She is scientist at the Department of Production Safety and Quality, Faculty of Mechanical Engineering, Technical University of Košice. Her activity is focused on major industrial accidents, explosion prevention in industry, risk assessment, occupational health and safety, behaviour based safety (BBS) and risks in the context of Industry 4.0. She was a member of international project 7. RP iNTeg-Risk Early Recognition, Monitoring, and Integrated Management of Emerging, New Technology related, Risks and also member of several national projects. Most recent publications related to the domain of the project: • Measurement of low-frequency noise during CNC machining and its assessment / Michaela Balážiková ... [et al.] - 2018. In: Measurement. Vol. 119 (2018), p. 190-195. - ISSN 0263-2241 Available: https://www.sciencedirect.com/science/article/pii/S0263224118300903... • Intermediate ceiling board - risk element of road tunnels / Milan Oravec ... [et al.] - 2017. In: Fire protection,safety and security 2017. - Zvolen : Technická univerzita vo Zvolene, 2017 s. 149-160. - ISBN 978-80-228-2957-1 • Modelling ammonia pipeline leakage for the proposed pipeline change / Hana Pačaiová, Zuzana Kotianová, Tomáš Brestovič - 2016. In: Production Management and Engineering Sciences. - Leiden : CRC Press/Balkema, 2016 P. 509-515. - ISBN 978-1-138-02856-2 Available: http://www.scopus.com/record/display.uri?eid=2-s2.0-84949921155&origin=resultslist&sort=plf-f&src=s&... • Solid aerosol - source of occupational diseases / Juraj Glatz, Zuzana Kotianová, Michal Gorzás - 2019. In: MM Science Journal. - Prague (Česko) : MM Publishing č. December (2019), s. 1-4 [print, online]. - ISSN 1803-1269 • [GLATZ, Juraj - KOTIANOVÁ, Zuzana - GORZÁS, Michal] • Analysis of low frequency magnetic fields generated during welding / Juraj Glatz, Michal Gorzás, Zuzana Kotianová - 2017. In: MM Science Journal. Vol. 2017, no. December (2017), p. 2046-2049. - ISSN 1803-1269
Assos. prof. Stefan Markulik, PhD.	He is associated professor at Department of Safety and Quality Production. He is also manager at Faculty of mechanical engineering and internal auditor for quality management system (QMS). His scientific and professional activities are focused to lecturing, publishing, participating in national and international scientific conferences. He has experience with several research projects and cooperation with industry. He actively provides professional lectures and helps to create cooperation between students and enterprises. His mainly orientation is implementation of management systems in enterprises. Most recent publications related to the domain of the project: • Balážiková, M., Sinay, J., Dulebová, M., Markulik, Š., Kotianová, Z.: Measurement of low-frequency noise during CNC machining and its assessment - 2018. In: Measurement. Vol. 119 (2018), p. 190-195. - ISSN 0263-2241. • Pačaiová, H., Sinay, J., Turisová, R., Hajduová, Z., Markulik, Š.: Measuring the qualitative factors on copper wire surface - 2017. In: Measurement. Vol. 109 (2017), p. 359-365. - ISSN 0263-2241.

Names of the staff members	*Summary of relevant skills and experience, including where relevant a list of recent publications related to the domain of the project.*
	• Nagyová, A., Balážiková, M., Markulik, Š., Sinay, J., Pačaiová, H.: Implementation proposal of OH&S management system according to the standard ISODIS 45001 - 2018. In: Advances in Intelligent Systems and Computing 604 : AHFE 2017. - Cham : Springer International Publishing, 2018 P. 472-485. - ISBN 978-3-319-60525-8. • Markulik, Š., Cehlár, M., Kozel, R.: Process approach in the mining conditions - 2018. In: Acta Montanistica Slovaca. Roč. 23, č. 1 (2018), s. 46-52. - ISSN 1335-1788. • Markulik, Š., Kamenický, L.: How to transform the requirements into the management system? - 2015. In: SGEM 2015. - Sofia : STEF92 Technology, 2015 P. 689-693. - ISBN 978-619-7105-40-7
Assos. prof. Jaroslava Kadarova, PhD.	She is an associate professor at the Institute of Management, Industrial and Digital Engineering, of the Faculty of Mechanical Engineering, Technical University of Kosice. In 1998 she graduated from the University of Economics in Bratislava. She received her PhD. degree in Engineering Technologies and Materials from the Technical University of Kosice in 2006. Since 2010 she is working as associate professor in Industrial Engineering. Her research interests include strategic, financial, and crisis management, controlling and innovations. Most recent publications related to the domain of the project: • Operating parameters at hydrogen leak from a metal hydride container applied in automotive industry and pressure effects of an explosion on the environment / Tomáš Brestovič ...[et al] - 2019.In: Journal of Molecular Liquids. - Amsterdam (Holandsko) : Elsevier Roč. 290 (2019), s. 11206-11206 [print, online]. - ISSN 0167-7322 Spôsob prístupu: https://www.sciencedirect.com/science/article/pii/S0167732219308372. • Ecological analysis related to creation of gaseous emissions within transport focused on fulfilment of the future emission standards / Michal Puškár, Melichar Kopas, Jaroslava Kádárová - 2017.In: Transportation Research Part D. Vol. 57 (2017), p. 413–421. - ISSN 1361-9209 • ADC Environmental study focused on the suitability of vehicle certifications using the new European driving cycle (NEDC) with regard to the affair "dieselgate" and the risks of NOx emissions in urban destinations / Michal Puškár ... [et al.] - 2019.In: Air Quality, Atmosphere and Health. - DORDRECHT (Holandsko) : Springer Nature Roč. 12, č. 2 (2019), s. 251-257 [online]. - ISSN 1873-9318 Available at: https://link.springer.com/article/10.1007/s11869-018-0646-5. • ADC Complex analysis focused on influence of biodiesel and its mixture on regulated and unregulated emissions of motor vehicles with the aim to protect air quality and environment / Michal Puškár ... [et al.] - 2019.In: Air Quality, Atmosphere and Health. - DORDRECHT (Holandsko) : Springer Nature Roč. 12, č. 7 (2019), s. 855-864 [online]. - ISSN 1873-9318 Spôsob prístupu: https://link.springer.com/article/10.1007%2Fs11869-019-00704-w. • Improvement of production efficiency of tapered roller bearing by using plant simulation / Peter Malega,Jaroslava Kádárová, Ján Kobulnický - 2017.In: International Journal of Simulation Modelling. Vol. 16, no. 4 (2017),p. 682-693. - ISSN 1726-4529

III.3.3. Partner number – P3 – Riga Technical University

Organisation name	Country
Riga Technical University / Rigas Tehniska universiate	**Latvia**

III.3.3.1. Aims and activities of the organisation

Riga Technical University (RTU) is an internationally recognized European university that consists of nine faculties and 35 institutes. RTU is the leading Latvian technical university that is active in knowledge society technologies. RTU has a strong vision to transform the large set of multi-disciplinary expertise into the reusable knowledge of a networked society. RTU has installed the High Performance Computing (HPC) facility and it is available it to RTU institutes as well as international researchers. Distance Education Study Centre (DESC) of RTU, the partner in FuturICT2.0 project, has had a long term experience in 10 cutting-edge EU FP5/FP6/FP7/CIP-PSP-ICT/H2020 projects and in more than 30 international projects related to ICT, Learning Analytics, Data Mining, and Creativity Development. DESC has received the Riga Council Innovation Award 2010 for contribution in eLearning and National research strategy, and the Baltic Sea region BOLDIC 2013 award for the best innovation in developed of multi-screen eLearning technology. DESC has a Multimedia Lab and tools to successfully carry out research on multiplatform ICT solutions. Participating in FuturICT2.0 project events, doctoral schools, seminars, and conferences the team has cutting-edge knowledge in the complexity science, externalities concepts, Finance 4.0 and DLT technology. Team has publications related to research & development of knowledge society technologies and related educational activities. Project team has got a cutting edge knowledge on Economic Complexity and Economic Fitness research by participating in ERA-NET project FuturICT 2.0. Website: www.rtu.lv.

III.3.3.2. Role of the organisation in the project

The organisation manages and supports a variety of WPs and tasks as follows:

Manages:

- WP4. Effectiveness Evaluation

The organization will furthermore support WP3 (Quality Assurance) by collectively participating with other organizations as peer reviewers of project deliverable quality before these are disseminated. This supportive role aims at leveraging the combined expertise of project participants for maximising quality and implementation effectiveness. This approach is based on the paradigm of "wisdom of the crowds" (https://en.wikipedia.org/wiki/The_Wisdom_of_Crowds). The relevant peer review process will be managed by the owner of WP3 accordingly. The peer review process will be highly scripted and will be mandatory before official closure of the related tasks. Creating the review script is a task the owner of WP3. The project participants accountable for the results will provide such to a peer review panel and then discuss them in an online conference. The responsibility of the peer review panel will be to use the separately prepared review script to assess the deliverables bevor the conference. The peer reviewers will also join project team events, participate in the regular monthly quality and effectiveness review meetings, and support dissemination efforts. At all times, peer reviewers will be accountable for demonstrating effort made / time spent, attending governance and review meetings, and continuously provide high quality improvement suggestions.

III.3.3.3. Operational/Technical capacity: skills and expertise of key staff involved in the project

Names of the staff members	*Summary of relevant skills and experience, including where relevant a list of recent publications related to the domain of the project.*
Dr.phys. Atis Kapenieks	Scientific project manager in Latvia, has a great experience in administration and leading of EU and National level ICT, educational and e-learning projects. He is Head of Latvian delegation in EU 5th, 6th,7th Framework and Horizon 2020 ICT program. Most recent publications related to the domain of the project:

Names of the staff members	*Summary of relevant skills and experience, including where relevant a list of recent publications related to the domain of the project.*
	• Daugule, I., Kapenieks, A. The Data of the Initial Motivation – A Valuable Source for the Development of the Course Content. A Case Study in the Group of Business Students. International Journal of Engineering & Technology, 2018, Vol.7, No.2.28, 89.-94.lpp. ISSN 2227-524X. • Daugule, I., Kapenieks, A. Collaborative Knowledge Flow — Mapping the E-Learning Environment. No: EDULEARN17: 9th International Conference on Education and New Learning Technologies: Proceedings, Barcelon, 3.-5. July, 2017. 2017, 3304.-3311.lpp. ISBN 978-84-697-3777-4. ISSN 2340-1117. • Gorbunovs, A., Kapenieks, A., Cakula, S. Self-Discipline as a Key Indicator to Improve Learning Outcomes in E-Learning Environment. Procedia - Social and Behavioral Sciences, 2016, Vol.231, 256.-262.lpp. ISSN 1877-0428. • Kapenieks, A., Žuga, B., Štāle, G., Jirgensons, M. E-Ecosystem-Driven Approach to Lifelong Learning for the Next Generation. No: New Media for Active Learning in the Digital Age: Inernational Conference: New Media for Active Learning in the Digital Age, Lietuva, Šiauliai, 7.-8. jūnijs, 2013. Šiauliai: Šiauliu universitetas, 2013, 6.-15.pages. ISBN 9786094302039. • Kapenieks, A., Žuga, B., Kapenieks, J., Majore, G., Jirgensons, M., Ozoliņa, A., Apinis, B., Vītoliņa, I., Gorbunovs, A., Kudiņa, I., Kapenieks, J., Gulbis, R., Treijere, M., Slaidiņš, I., Jākobsone-Šnepste, G., Gibže, S., Kapenieks, K., Tomsons, D., Ulmane-Ozoliņa, L., Letinslis, J., Cakula, S., Balode, A., Blija, T., Vilkonis, R., Cibulskis, G., Rutkauskiene, D. "eBig3": A New Triple Screen Approach for the Next Generation of Lifelong Learning. No: Recent Advances in Computer Science, Greece, Rhodes Island, 16.-19. jūlijs, 2013. Rhodes Island: 2013, 306.-310.lpp. ISBN 978-960-474-311-7. ISSN 1790-5109. • Gorbunovs, A., Kapenieks, A., Kudiņa, I. Advancement of E-Portfolio System to Improve Competence Levels. No: Society, Integration, Education : Proceedings of International Scientific Conference: International Scientific Conference "Society, Integration, Education", Latvija, Rēzekne, 24.-25. maijs, 2013. Rēzekne: Rēzeknes Augstskola, 2013, 61.-72.lpp. • Gorbunovs, A., Kapenieks, A. An Effect of ePortfolio System on Competence Improvement at the Different Stages of the Course. No: Rural Environment. Education. Personality (REEP): Proceedings of the 6th International Scientific Conference, Latvija, Jelgava, 20.-21. marts, 2013. Jelgava: Latvia University of Agriculture, 2013, 200.-206.lpp. ISSN 2255-8071. • Gorbunovs, A., Kapenieks, A., Kudiņa, I. Competence Development in Combined Assessment and Collaborative E-Portfolio Information System. Procedia Computer Science, 2013, Vol.26, 79.-100.lpp. ISSN 1877-0509. • Jonhson, J., Buckingham Shum, S., Willis, A., Swithenby, S., Zamenopoulos, T., MacKay, R., Lorincz, A., Costea, C., Bourgine, P., Louca, J., Kapenieks, A., Kelley, P., Caird, S., Bromley, J., Deakin Crick, R., Goldspink, C., Bishop, S., Helbing, D. The FuturICT Education Accelerator. European Journal of Physics, 2012, Vol.214, Iss.1, 215.-243.lpp. ISSN 1951-6355. e-ISSN 1951-6401.
Ieva Vītoliņa	Researcher, has long term experience in e-content design and delivery. She will contribute to the data analytics and algorithms design. She ambassador of Latvian Open Data Association with good knowledge of Latvian IT industry Landscape. Most recent publications related to the domain of the project: • Vītoliņa, I., Kapenieks, A. User Analysis for E-Inclusion in a Blended Learning Course Delivery Context. No: Society, Integration, Education: Proceedings of the International Scientific Conference, Latvija, Rēzekne, 23.-24. maijs, 2014. Rezekne: Rezekne Higher Education Institution, 2014, 367.-378.lpp. ISBN 978-9984-44-141-2. ISSN 1691-5887. Pieejams: doi:10.17770/sie2014vol2.656 • Vītoliņa, I., Kapenieks, A. e-Inclusion and Knowledge Flows in e-Course Delivery. No: 5th International Conference on Computer Supported Education (CSEDU 2013): Proceedings, Vācija, Aachen, 6.-7. maijs, 2013. Aachen: 2013, 417.-422.lpp. ISBN 978-989-8565-53-2. Pieejams: doi:10.5220/0004385204170422

Names of the staff members	*Summary of relevant skills and experience, including where relevant a list of recent publications related to the domain of the project.*
	• Vītoliņa, I., Kapenieks, A. E-Inclusion Measurement by E-Learning Course Delivery. Procedia Computer Science, 2013, Vol.26, 101.-112.lpp. ISSN 1877-0509. Pieejams: doi:10.1016/j.procs.2013.12.010
Viktors Zagorskis	Has substantial research experience in Data Analytics and Machine Learning technologies. He will oversee the technical design of IDL Technology. Most recent publications related to the domain of the project: • Zagorskis V., Kapenieks A., Review of Cognitive Energy Flow Model Concept for Virtual Student, Proceedings of the 11th International Conference on Computer Supported Education, Heraklion, Crete, Greece, 2-4 May 2019, Vol.2, pp.542-549, ISBN: 978-989-758-367-4 • Zagorskis V., Kapenieks A., and Gorbunovs A. Emotions identification utilizing periodic handwriting on mobile surfaces. Periodicals of Engineering and Natural Sciences. Vol 7, No 1 (2019). pp.228-237.. • Zagorskis V., Kapenieks A., and Gorbunovs A. Cognitive Energy Flow Model Concept for Virtual Student. Proceedings of CELDA 2018. 15th International Conference on Cognition and Exploratory Learning in Digital Age, October 26, 2018, pp. 358-362., ISBN: 978-989-8533-81-4 © 2018. • Zagorskis, V., Kapenieks, A. Impact of LMS Selection on Students' Activity Students' Activity Evaluation Problems in Moodle and Open edX Learning Management Systems. No: Proceedings of the 10th International Conference on Computer Supported Education, Portugāle, Funchal, Madeira, 15.-17. marts, 2018. Portugāle: 2018, 505.-512.lpp. ISBN 978-989-758-291-2. • Gintere, I., Zagorskis, V., Kapenieks, A. Concepts of e-Learning Accessibility Improvement – Codes of New Media Art and User Behavior Study. No: Proceedings of the 10th International Conference on Computer Supported Education, Portugāle, Funchal, Madeira, 15.-17. march, 2018. Portugal: 2018, 426.-431.lpp. ISBN 978-989-758-291-2.
Bruno Žuga	He has a degree in Electronics and Telecommunications. His research experience includes research in data mining, learning analytics, multiscreen e-learning; work experience – instructional design for interactive TV and mLearning. He will contribute to state of the art research, evaluation methodology development and validation of results. Most recent publications related to the domain of the project: • Žuga, B., Kapenieks, K., Vītoliņa, I., Mangusa, L., Kapenieks, A. eLearning Approach eBig3: Development, Delivery and Evaluation. No: Sabiedrība, integrācija, izglītība: Starptautiskās zinatniskās konferences materiāli, Latvija, Rēzekne, 23.-24. maijs, 2014. Rēzekne: Rēzeknes Augstskola, 2014, 379.-387.lpp. ISBN 978-9984-44-141-2. ISSN 1691-5887. • Žuga, B., Kapenieks, A., Gorbunovs, A., Jirgensons, M., Kapenieks, J., Kapenieks, J., Vītoliņa, I., Jākobsone-Šnepste, G., Kudiņa, I., Kapenieks, K., Timšāns, Ž., Gulbis, R. Concept of Learner Behaviour Data Based Learning Support. Procedia Computer Science, 2015, Vol.43, 134.-140.lpp. ISSN 1877-0509. Pieejams: doi:10.1016/j.procs.2014.12.018 • Gorbunovs, A., Kapenieks, A., Kapenieks, K., Žuga, B., Gulbis, R., Kudiņa, I. Conceptual Design and Model of the Feedback Solutions in the Adaptive Integrated Technological Systems. No: The 11th International Scientific Conference "eLearning and Software for Education": Book of Abstracts, Rumānija, Bucharest, 23.-24. aprīlis, 2015. Bucharest: 2015, 42.-43.lpp. Pieejams: doi:10.12753/2066-026X-15-031 • Gorbunovs, A., Kapenieks, A., Žuga, B., Gulbis, R., Kapenieks, K., Kudiņa, I. Conceptual Design and Model of the Feedback Solutions in the Adaptive Integrated Technological Systems. No: Proceedings of the 11th International Scientific Conference eLearning and Software for Education (eLSE-2015), Rumānija, Bucharest, 23.-24. aprīlis, 2015. Bucharest: "Carol I" National Defence University Publishing House, 2015, 210.-215.lpp. ISSN 2343-7669.

Names of the staff members	*Summary of relevant skills and experience, including where relevant a list of recent publications related to the domain of the project.*
Janis Kapenieks	PhD student, played crucial role in creation of multiscreen e-learning environment in university. Long-term experience in building and running high-tech companies in developing countries. He will lead the educational needs research and modelling. He also has experience in scientific software prototype development. Most recent publications related to the domain of the project: • Kapenieks, A., Žuga, B., Vītoliņa, I., Kapenieks, J., Gorbunovs, A., Jirgensons, M., Kapenieks, J., Kudiņa, I., Kapenieks, K., Gulbis, R., Balode, A. Piloting the eBig3: A Triple-screen e-Learning Approach. No: Proceedings of the 6th International Conference on Computer Supported Education (CSEDU 2014), Vol.1, Spānija, Barcelona, 1.-3. aprīlis, 2014. [S.l.]: SciTePress, 2014, 325.-329.lpp. ISBN 978-989-758-020-8. Pieejams: doi:10.5220/0004848603250329 • Kapenieks, A., Žuga, B., Majore, G., Kapenieks, J., Jirgensons, M., Ozoliņa, A., Apinis, B., Vītoliņa, I., Gorbunovs, A., Kudiņa, I., Kapenieks, J., Gulbis, R., Treijere, M., Slaidiņš, I., Jākobsone-Šņepste, G., Gibže, S., Kapenieks, K., Tomsons, D., Ulmane-Ozoliņa, L., Cakula, S., Balode, A., Blija, T., Vilkonis, R., Cibulskis, G., Rutkauskiene, D., Gailesaite, L. eBig3: Experience in Using Triple- Screen Technology in Lifelong Learning. No: New Media for Active Learning in the Digital Age: Inernational Conference, Lietuva, Šiauliai, 7.-8. jūnijs, 2013. Šiauliai: Šiauliu universitetas, 2013, 16.-25.lpp. ISBN 978-609-430-203-9.

III.3.4. Partner number – P4 – Lisbon University

Organisation name	Country
Universidade de Lisboa/Técnico Lisboa	**Portugal**

III.3.4.1. Aims and activities of the organisation

Universidade de Lisboa was created in July 2013, as a result of the merger of Universidade Técnica de Lisboa and Universidade de Lisboa (tracing its origins to the establishment of the Portuguese University in 1290). Universidade de Lisboa has 18 schools and over 100 research units, around 50,000 students, 4.000 lecturers, 2.500 non-academic staff and 400 degree courses. Teaching, research, science, technology and innovation are the core business of Universidade de Lisboa. Instituto Superior Técnico was created in 1911 and is the school of Engineering, Science and Technology and Architecture of Universidade de Lisboa. In these domains, IST represents the largest and most reputed school in Portugal and one of the bests in Europe. IST consists of 10 Departments and there are about 10.000 full-year equivalent under and post graduate students, and about 1.600 full time equivalent teaching and non-teaching staff. Internationalization has been defined as a key strategic goal over the past few years with increasing number of international students and staff, as well as an increasing and dynamic participation in international academic networks and partnerships of excellency. Through a large number of agreements with other institutions worldwide (more than 500), IST participates in more than 50 Double Degree programmes, and joint PhD programmes with MIT, CMU, UT-Austin and EPFL, thus promoting a highly modern and culturally diverse society. Website: https://tecnico.ulisboa.pt/en/

III.3.4.2. Role of the organisation <u>in the project</u>

Please describe the role of the organisation in the project and how the organisation will actually contribute to the project success. (Recommended limit 1500 characters)

The organisation manages and supports a variety of WPs and tasks as follows:

Manages:

- WP 5 Dissemination and Exploitation of Results
- WP10 Create Case Studies

The organization will furthermore support WP3 (Quality Assurance) by collectively participating with other organizations as peer reviewers of project deliverable quality before these are disseminated. The organization will also support WP4 (Effectiveness Evaluation) to ensure improvements to project deliverable quality are identified and fed back to those accountable for product deliverables. This supportive role aims at leveraging the combined expertise of project participants for maximising quality and implementation effectiveness. This approach is based on the paradigm of "wisdom of the crowds" (https://en.wikipedia.org/wiki/The_Wisdom_of_Crowds). The relevant peer review process will be managed by the owners of WP3 and WP4 accordingly. The peer review process will be highly scripted and will be mandatory before official closure of the related tasks. Creating the review script is a task the owner of WP3 and WP4 respectively. The project participants accountable for the results will provide such to a peer review panel and then discuss them in an online conference. The responsibility of the peer review panel will be to use the separately prepared review script to assess the deliverables bevor the conference. The peer reviewers will also join project team events, participate in the regular monthly quality and effectiveness review meetings, and support dissemination efforts. At all times, peer reviewers will be accountable for demonstrating effort made / time spent, attending governance and review meetings, and continuously provide high quality improvement suggestions.

III.3.4.3. Operational/Technical capacity: skills and expertise of key staff involved in the project

Names of the staff members	*Summary of relevant skills and experience, including where relevant a list of recent publications related to the domain of the project.*
Prof. Nuno Gonçalo Cordeiro Marques de Almeida	Assistant Professor in the Department of Civil Engineering, Architecture and Georesources (IST – University of Lisbon), senior lecturer and member of the scientific committees in the Master Programs in Civil Engineering (2017-2019), Environmental Engineering (2012-2016) and Construction and Rehabilitation (2012-2014) offered at IST (University of Lisbon). He is a member of the research unit Civil Engineering Research and Innovation for Sustainability (CERIS) where he created and advises research on the topic of "Value-driven management of infrastructure and building assets". With a professional background in construction project management, his academic and research activities seek to advance the discipline of asset management and promote the assimilation of innovative solutions to infrastructure, building and advanced facilities of both the public and private sectors. He has advised and coordinated interdisciplinary research and consultancy projects in cooperation with practitioners of the construction, water, rail and road sectors to optimize cost, risk and performance of physical (civil) assets. He is president of the ISO/TC251 Asset Management national "mirror committee" and was involved in the development of the technical specification for aligning financial and non-financial functions within asset management and organizes regular thematic asset management conferences in liaison with other standardization committees. As a member of the International Society of Engineering Asset Management, he is involved in developing a recognition scheme of academic programs that cover the scope of Engineering Asset Management in higher educational institutions. He sits in the scientific committee of three annual international congresses: the World Congress of Engineering Asset Management, Automation Innovation in Construction and Artificial Intelligence and Digital Technology in Construction Management. He has published more than 50 papers in international journals and conferences on value-based decision making, process approach in asset intensive organizations, asset economics, economic information databases, alignment of technical and financial functions within asset management, life cycle cost modelling of building facilities and infrastructure assets, uncertainty in infrastructure asset management planning, engineering design and construction risk management, performance-based buildings, performance indicators and measurement systems, occupational safety and health management in the construction industry, gross margin deviations in construction projects, time-cost relationship models for construction projects, infrastructure condition rating systems using artificial intelligence tools, quality assurance and insurance-based warranty models against construction defects, sustainable construction, construction and demolition waste management and the circular economy for architectural stone, concrete and other cement-based construction materials. Most recent publications related to the domain of the project: • Schwabe, O. Schneider, L. Almeida, N. Salvado, A.F. (2019) A Framework for Accelerating Innovation through Innovation Webs. Sustainability and Automation in Smart Constructions: Proceedings of the International Conference on Automation

Names of the staff members	*Summary of relevant skills and experience, including where relevant a list of recent publications related to the domain of the project.*
	Innovation in Construction (CIAC-2019), Leiria, Portugal. Rodrigues, H., Gaspar, F., Fernandes, P., Mateus, A. (Eds.). Springer eBook on Advances in Science, Technology & Innovation (in press) • João Vieira, Marta Cabral, Nuno Almeida, Jaime Gabriel Silva & Dídia Covas (2020) Novel methodology for efficiency-based long-term investment planning in water infrastructures, Structure and Infrastructure Engineering, DOI: 10.1080/15732479.2020.1722715 • Trindade, M. Almeida, N. Finger, M. Ferreira, D. (2019): Design and development of a value-based decision-making process for asset intensive organizations. Asset Intelligence through Integration and Interoperability and Contemporary Vibration Engineering Technologies, pp. 605-624. Springer. Ed. Mathew, J. Lim, C.W. Ma, L. Sands., D. Cholette, M. Borghesani, P. Proceedings of the 12th World Congress on Engineering Asset Management and the 13th International Conference on Vibration Engineering and Technology of Machinery. ISSN 2195-4356 ISSN 2195-4364 (electronic), Lecture Notes in Mechanical Engineering. ISBN 978-3-319-95710-4 ISBN 978-3-319-95711-1 (Springer eBook) https://doi.org/10.1007/978-3-319-95711-1 • Salvado, F. Almeida, N. Azevedo, A. (2019): Historical analysis of the economic life-cycle performance of public school buildings, Building Research & Information, 47: 7, 813-832, DOI: 10.1080/09613218.2019.1612730 • Salvado, F. Almeida, N. Azevedo, A. (2018): Toward improved LCC-informed decisions in building management, Built Environment Project and Asset Management, 8: 2, 114-133, doi.org/10.1108/BEPAM-07-2017-0042 • Trindade, M. Almeida, N. (2018): The impact of digitalisation in asset-intensive organisations. Network Industries Quarterly. Special issue: The path towards digitalisation in road infrastructure. Vol. 20, issue 4, 2018 (December) • Almeida, N. Sousa, V. Alves Dias, L.M. Branco, F. (2015): Managing the technical risk of performance-based building structures, Journal of Civil Engineering and Management, 21:3, 384-394 • Almeida, N. Sousa, V. Alves Dias, L.M. Branco, F. (2015): Engineering risk management in performance-based building environments, Journal of Civil Engineering and Management, 21:2, 218-230

III.3.5. Partner number – P5 – ed-media e.V.

Organisation name	Country
ed-media e.V.	**Germany**

III.3.5.1. Aims and activities of the organisation

ed-media e.V. is an independent institute at the University of Kaiserslautern (Campus Zweibrücken). The institute organizes MBA distance learning courses (e.g. Motorsport and Innovation Management) at the three locations Zweibrücken, Augsburg and Nürburgring. In addition, ed-media compiles lasting concepts and training further for the authority development in enterprises. Digital applications (e.g. explanation videos and learning systems) are used for this purpose. A further range is the project development and the management of projects approximately around the topics productivity, specialized innovation and digitization. ed-media also develops individual concepts and further training for the personnel development of companies. To this end, ed-media has the experience to prepare employees for their tasks in a target-oriented way using modern forms of learning and digital media and to activate them for self-learning. The focus is on the process towards a learning organisation. As a project taker of projects funded by the Federal Ministry of Labour and Social Affairs and project partner in the INTERREG project PRODPILOT, the ed-media team can draw on a large pool of experience. The work in these projects ranges from project management to public relations and marketing or the creation of workshops. Website: www.ed-media.org

III.3.5.2. Role of the organisation in the project

The organisation manages and supports a variety of WPs and tasks as follows:

Manages:

- WP6. Create Career Framework

The organization will furthermore support WP3 (Quality Assurance) by collectively participating with other organizations as peer reviewers of project deliverable quality before these are disseminated. The organization will also support WP4 (Effectiveness Evaluation) to ensure improvements to project deliverable quality are identified and fed back to those accountable for product deliverables. This supportive role aims at leveraging the combined expertise of project participants for maximising quality and implementation effectiveness. This approach is based on the paradigm of "wisdom of the crowds" (https://en.wikipedia.org/wiki/The_Wisdom_of_Crowds). The relevant peer review process will be managed by the owners of WP3 and WP4 accordingly. The peer review process will be highly scripted and will be mandatory before official closure of the related tasks. Creating the review script is a task the owner of WP3 and WP4 respectively. The project participants accountable for the results will provide such to a peer review panel and then discuss them in an online conference. The responsibility of the peer review panel will be to use the separately prepared review script to assess the deliverables bevor the conference. The peer reviewers will also join project team events, participate in the regular monthly quality and effectiveness review meetings, and support dissemination efforts. At all times, peer reviewers will be accountable for demonstrating effort made / time spent, attending governance and review meetings, and continuously provide high quality improvement suggestions.

III.3.5.3. Operational/Technical capacity: skills and expertise of key staff involved in the project

Names of the staff members	*Summary of relevant skills and experience, including where relevant a list of recent publications related to the domain of the project.*
Patrick Schackmann	Patrick is managing director of the Institute ed-media and lecturer at the Kaiserslautern University of Applied Sciences for Quality Management and Logistics Project selection. He represents the EU-project PRODPILOT to improve productivity in SMEs with Lean-Workshop-concepts and support of optimisation projects in the company, a professional security project in the hotel and restaurant industry with the creation of practical aids, checks and training, an ESF project "Demography Cockpit", consulting for SMEs in the industry on the introduction of standardized HR processes and an ESF project "Sustainable Work Logistics", initial consultation of logistics companies in the development of modern personnel policy.
Prof. Dr. Bettina Reuter	Bettina is Professor at the University of Applied Sciences in Kaiserslautern in Germany and heads up the MBA programme for Innovation Management in Motorsport. In 2001 she founded ed-media e.V. which supports organizations in the innovation and digital transformation of learning and organizational processes, as well as the delivery of MBA level distance learning courses. Most recent publications related to the domain of the project: • Reuter, Bettina: Motorsport Management: Basics - Processes - Visions; Springer Verlag 2018 • Reuter, Bettina: "Green Logistics - A Challenge for Controlling? Lecture by RKW Baden-Württemberg, 2014 • Reuter, Bettina: Lean and green - Technological Trends in Logistics, Zukunftsinitiative Rheinland Pfalz (ZIRP), 2012 Since 2018 member of the initiative "we move it - the Business Ecosystem of the Vehicle Industry" of the Ministry of Economics and Transport in Rhineland-Palatinate. FIA World Rally Championship - Rallye Deutschland. 2017, 2018 and 2019 FIA Environmental Officers. Since January 2017, DMSB, Head of AG (Speaker) Qualification)
Daniel Wendel	• Master of Arts Mittelstandsmanagement

Names of the staff members	*Summary of relevant skills and experience, including where relevant a list of recent publications related to the domain of the project.*
	• Bachelor of Arts Industrial Management • EU-project PRODPILOT to improve productivity in SMEs with Lean-Workshop-concepts and support of optimization projects in the company

III.3.6. Partner number – P6 – Edna Pasher Ph.D & Associates

Organisation name	Country
Edna Pasher Ph.D & Associates	**Israel**

III.3.6.1. Aims and activities of the organisation

Edna Pasher Ph.D & Associates is a leading strategic management-consulting firm located in Israel specializing in research, consulting and training. The combination of our unique core competences in the areas of strategy, knowledge and innovation management, and our experience of 41 years enables us to grant managers and organizations the best professional support on their way to the top. Website: www.pasher.co.il

III.3.6.2. Role of the organisation in the project

The organisation manages and supports a variety of WPs and tasks as follows:

Manages:

- WP7. Create Collaboration Community

The organization will furthermore support WP3 (Quality Assurance) by collectively participating with other organizations as peer reviewers of project deliverable quality before these are disseminated. The organization will also support WP4 (Effectiveness Evaluation) to ensure improvements to project deliverable quality are identified and fed back to those accountable for product deliverables. This supportive role aims at leveraging the combined expertise of project participants for maximising quality and implementation effectiveness. This approach is based on the paradigm of "wisdom of the crowds" (https://en.wikipedia.org/wiki/The_Wisdom_of_Crowds). The relevant peer review process will be managed by the owners of WP3 and WP4 accordingly. The peer review process will be highly scripted and will be mandatory before official closure of the related tasks. Creating the review script is a task the owner of WP3 and WP4 respectively. The project participants accountable for the results will provide such to a peer review panel and then discuss them in an online conference. The responsibility of the peer review panel will be to use the separately prepared review script to assess the deliverables bevor the conference. The peer reviewers will also join project team events, participate in the regular monthly quality and effectiveness review meetings, and support dissemination efforts. At all times, peer reviewers will be accountable for demonstrating effort made / time spent, attending governance and review meetings, and continuously provide high quality improvement suggestions.

III.3.6.3. Operational/Technical capacity: skills and expertise of key staff involved in the project

Names of the staff members	*Summary of relevant skills and experience, including where relevant a list of recent publications related to the domain of the project.*
Dr.Edna Pasher	Dr.Edna Pasher earned her Ph.D (1981) in Media Ecology at New York University department of Communication Arts and Sciences and has served as faculty member at Adelphi University, the City University of New York, the Hebrew University in Jerusalem and the Tel-Aviv University. Edna Pasher founded EP as an international strategic management consulting firm in 1978. The firm provides customized consulting services to organizations both in the private and the public sectors. Edna was the pioneer and leader of the Innovation and Knowledge management movement in Israel and an active member of the international community of the Intellectual Capital pioneers. She has 24 years of

Names of the staff members	*Summary of relevant skills and experience, including where relevant a list of recent publications related to the domain of the project.*
	experience in regional and international ICT research and innovation projects funded by the EU using a variety of evaluation methodologies, modelling techniques, quantitative and qualitative analysis. Edna is the Founding partner (1991) and chief editor of "Status – the Israeli Management Management", and the Founding Partner and Chairperson (2015) of ISCI Israel Smart Cities Institute (NGO) she is a frequent speaker in international conferences.
Lee Sharir	Lee Sharir is a researcher at Edna Pasher PhD & Associates and a project manager at the Israel Smart Cities Institute (ISCI). Captain in the reserves at the Intelligence corps of the IDF. In her military service, Lee made technological and economic studies. Lee is a BA student in Bar Ilan University in Social Sciences, specializing in economics.

III.3.7. Partner number – P7 – EureCons Förderagentur GmbH

Organisation name	Country
EureCons Förderagentur GmbH	**Germany**

III.3.7.1. Aims and activities of the organisation

EureCons Förderagentur GmbH is a private consulting and research company (SME), operating nationally and internationally founded in 2011. As an association of interdisciplinary, cooperating experts from science and practice, as well as international partners, EureCons Förderagentur offers support for companies and local authorities in all areas of strategic development and analysis (scientific and market research, forecasting, SWOT analysis, surveys, etc). In addition, EureCons Förderagentur offers support in management services, project management, creation of consortia, as well as funding advice. Within the framework of European national and international projects we support our clients from development, through partner search, to active support in overall management. An efficient and sustainable Quality Management is also an integral part of our consultation. The focus in the European projects is on programs such as Horizon 2020, Erasmus+, ESF and Interreg. EureCons Förderagentur sees itself as an interface between consulting and research, as well as a door opener for European projects. EureCons Förderagentur is also responsible for city planning tasks, among them projects for immigrant youth, reviews, intercultural project development and the organization of expert hearings on these topics. As lead partner in several projects (national and international) EureCons Förderagentur provides trainings for entrepreneurs as well as job-trainings. EureCons Förderagentur's key competences are analysis and studies on the labour market/strategic development/networks/knowledgetransfer, methods in staff development in the light of demographic change, quality management coachings as well as project management and creating and leading networks. In general, the staff of FAB has more than 30 years' experience in coachings for long-term unemployed, migrants, younger people and entrepreneurs as well as in leading national and transnational projects:

- Employment Initiative for long-term unemployed over 50 years including transnational internships in agricultural areas.
- Integration through exchange project for unemployed young academics and NEETs. The project provided intercultural training, language trainings, internships, working experience. consulting for entrepreneurs of migration background, job coaching in districts with high migration percentage.
- Train-the-trainer projects for the training of certified "demography trainers" together with nationwide partners.
- Training for single parents: coaching on work life balance challenges regarding time management, re-integration through qualification, job orientation for pre-graduates
- experience as lead partner in IdA (Integration through Exchange) projects, which focused on unemployed academics and young people without qualification. In the IdA project, young people were at first given intercultural and language training and then sent abroad, namely Edinburgh and Rimini, to gain working experience by doing an internship. As lead partner, Förderagentur was responsible for draft development, strategic planning, scheduling, financial planning, networking, management of the consortia, project management, project controlling and reporting.
- ESF article 6 AGIL, with the purpose to develop a local employment strategy on the basis of regional demographic and job market related data. Outcome: local employment strategy.
- Innovative Approaches to the Management of Change - Smart Region - ESF Article 6: Scientific analysis of the reasons for early retirement Selection of measures at company and general level and the realisation of relevant measures in the project regions, Raising the awareness of actors and the general public for the themes of ageing and the labour market. Outcome: guidelines.

- Pro-Fit (Equal II) enterprise improvement by coaching and training courses, with respect to the city quarter activities and structures, and also with respect to the Diversity Management approach. Outcome: Entrepreneur training programme.
- Equal I project "Startklar", which was a start-up coaching project for women, immigrants and persons with handicaps. This project had local and European partners. Outcome: Entrepreneur training programme.
- The EureCons Förderagentur is a partner of KA2-Erasmus mobility project "The Backstage"
- The EureCons Förderagentur is currently hosting partner in several KA1-Erasmus project

EureCons team have more than 10 years of experience in the implementation of European projects in the areas of management, administration and financial management. Thanks to their involvement in international projects, they can lead intercultural dialogues and demonstrate problem solving skills.

III.3.7.2. Role of the organisation in the project

The organisation manages and supports a variety of WPs and tasks as follows:

Manages:

- WP9. In-Depth Needs Analysis

The organization will furthermore support WP3 (Quality Assurance) by collectively participating with other organizations as peer reviewers of project deliverable quality before these are disseminated. The organization will also support WP4 (Effectiveness Evaluation) to ensure improvements to project deliverable quality are identified and fed back to those accountable for product deliverables. This supportive role aims at leveraging the combined expertise of project participants for maximising quality and implementation effectiveness. This approach is based on the paradigm of "wisdom of the crowds" (https://en.wikipedia.org/wiki/The_Wisdom_of_Crowds). The relevant peer review process will be managed by the owners of WP3 and WP4 accordingly. The peer review process will be highly scripted and will be mandatory before official closure of the related tasks. Creating the review script is a task the owner of WP3 and WP4 respectively. The project participants accountable for the results will provide such to a peer review panel and then discuss them in an online conference. The responsibility of the peer review panel will be to use the separately prepared review script to assess the deliverables bevor the conference. The peer reviewers will also join project team events, participate in the regular monthly quality and effectiveness review meetings, and support dissemination efforts. At all times, peer reviewers will be accountable for demonstrating effort made / time spent, attending governance and review meetings, and continuously provide high quality improvement suggestions.

III.3.7.3. Operational/Technical capacity: skills and expertise of key staff involved in the project

Names of the staff members	*Summary of relevant skills and experience, including where relevant a list of recent publications related to the domain of the project.*
Prof. Dr. Loreta Huber (geb. Ulvydiene)	Prof. dr. Loreta Huber is an expert consultant at EureCons GmbH. She is a former Vice-Dean for Projects at Vilnius University Kaunas Faculty and currently is a director of the first level study programme of Communication and Information Management Technologies at Kaunas University of Technology (KTU) Lithuania. The programme is implemented with Twente University in Netherlands. Among numerous courses taught are the ones of Communication, Technologies and Innovations of Intercultural Communicattion. Most recent publications related to the domain of the project: • Loreta Ulvydienė "Marital Status: Marriages and Divorces" in Population and Social Development. Jurėnienė V., Mostenska T., Fedulova I. (eds.) Pagal FP7 projektą PRORES (FP7/2007-2013) - "Pro-ecological restructuring for job" Marie Curie International Research Staff Exchange Scheme (IRSES) Grant Agreement Number: PIRSES-GA-2010-269251. Vilnius University, Lithuania; National University of Food Technologies, Ukraine; Institute of World Economy and International Relations, Ukraine. 2015, ISBN 978-609-459-553-0, pp. 33-35.

Names of the staff members	*Summary of relevant skills and experience, including where relevant a list of recent publications related to the domain of the project.*
	• Loreta Ulvydienė "Urban and Rural Population. Density of Population in Certain Regions" in Population and Social Development.Jurėnienė V., Mostenska T., Fedulova I. (eds.) Pagal FP7 projektą PRORES (FP7/2007-2013) - "Pro-ecological restructuring for job" Marie Curie International Research Staff Exchange Scheme (IRSES) Grant Agreement Number: PIRSES-GA-2010-269251. Vilnius University, Lithuania; National University of Food Technologies, Ukraine; Institute of World Economy and International Relations, Ukraine. 2015, ISBN 978-609-459-553-0, pp. 36-40. • 3. Loreta Ulvydienė "Nationality, Ethnicity in the Country". Languages Spoken. Groups Recognized as Discriminated or Otherwise Suffering from Social Exclusion" in Population and Social Development. Jurėnienė V., Mostenska T., Fedulova I. (eds.) Pagal FP7 projektą PRORES (FP7/2007-2013) - "Pro-ecological restructuring for job" Marie Curie International Research Staff Exchange Scheme (IRSES) Grant Agreement Number: PIRSES-GA-2010-269251. Vilnius University, Lithuania; National University of Food Technologies, Ukraine; Institute of World Economy and International Relations, Ukraine. 2015, ISBN 978-609-459-553-0, pp. 41-53.
Dr. Andreas Werner Huber	Dr. Andreas W. Huber: Graduated in regional development, Project manager to regional projects since 2003 (ESF Art. 6, Equal…) certified consultant on demographic change, certified QM manager, lead scientific analysis concerning labour market, demographic change and skilled personal. Most recent publications related to the domain of the project: • Technologietransfer – Regionalökonomische Auswirkungen auf Beschäftigungs- und Qualifikationsstrukturen. In: Jahrbuch Sozialwissenschaftliche Technikberichterstattung 2000. Schwerpunkt: Innovation und Arbeit; hrsg. von IAB; IfS; INIFES; ISF; SOFI. Berlin, 2000, S. 253 – 285 • Schaffen Innovationsnetze Arbeitsplätze? In: Regionale Innovationsnetzwerke im internationalen Vergleich. hrsg. von Reinhold Grotz, Ludwig Schätzl, Münster u.a., 2001, S. 101 – 118. ISBN 3-8258-5683-6 • Arbeitsmarkt- und betriebliche Beschäftigungsentwicklung in Bayern. Ergebnisse der bayerischen Teilstichprobe des IAB – Betriebspanels 1999 und 2000 (zusammen mit Paula Heinecker et. al.), Stadtbergen, 2001. • Ausgangslage für ein Konzept „Lebenslanges Lernen“ in Deutschland. Strukturelle, demografische, ökonomische, rechtliche und tarifvertragliche Voraussetzungen. In: LebensLangesLernen. Expertisen zu Lebenslangem Lernen – Lebensarbeitszeiten – Lebensweiterbildungskonten; hrsg. von Senatsverwaltung für Arbeit, Soziales und Frauen. Arbeitsmarktpolitische Schriftenreihe, Band 44, Berlin, 2001, S. IX – XIV • Fachkräftebedarf und „Mismatch“ in Nordschwaben. in: Behling, M., Huber, A., Staudinger, T. (Hrsg.): Perspektiven auf dem Arbeitsmarkt von morgen – Herausforderungen erkennen – Chancen nutzen. Augsburg 2009, S. 90-103. ISBN 3-937387-32-3 • Alternde Betriebe im regionalen Vergleich. In: Arbeitslosigkeit Älterer und Arbeitsmarktpolitik im Angesicht des demographischen Wandels. Ergebnisse aus der Bundesrepublik Deutschland und dem Land Berlin, hrsg. von Andreas Huber, Ernst Kistler und Udo Papies, Stuttgart, 2002, S. 51 – 64. • Regionale Altersstrukturen in Deutschland - Herausforderungen an betriebliche Gestaltungsstrategien. in: Loebe H., Severing E. (Hrsg.): Integration ältere Arbeitsloser - Strategien, Konzepte, Erfahrungen, Bielefeld 2008, S. 45-58. ISBN 978-3-7639-3457-7 • Beschäftigungstrends im Freistaat Bayern. Arbeitsmarkt- und betriebliche Beschäftigungsentwicklung in Bayern. Repräsentative Analysen auf Basis des IABBetriebspanels 2003, Bericht an das BayStMASF und die Regionaldirektion Bayern der Bundesagentur für Arbeit, Stadtbergen 2004. • Fachkräftebedarf und "Mismatch" im Agenturbezirk Augsburg In: Huber, Kräußlich, Staudinger (Hrsg.): Erwerbschancen für Ältere? Probleme, Handlungsmöglichkeiten, Perspektiven, Augsburg 2007, S. 83-98. ISBN 3-937387-31-5

Names of the staff members	*Summary of relevant skills and experience, including where relevant a list of recent publications related to the domain of the project.*
	• Management of Change als Steuerung sozialräumlicher Gestaltungsprozesse. Ein Beitrag zur angewandten sozialgeographischen Implementationsforschung, in Terra Facta Nr. 3, Augsburg 2004. ISBN 3-923273-53-3

III.3.8. Partner number – P8 – National University of Ireland Maynooth

Organisation name	Country
National University of Ireland Maynooth	**Ireland**

III.3.8.1. Aims and activities of the organisation

Maynooth University is an internationally recognised institution located 25 kilometres outside of Dublin, Ireland, and is the nation's fastest growing university. One of four constituent universities of the National University of Ireland, Maynooth University in 2019 placed #50 in the global top 100 universities under 50 years old in the Times Higher Education World University Rankings. On 16 June 2017, Maynooth University celebrated its 20th birthday, having been formally established as an autonomous university in 1997. Yet, it traces its origins to the foundation of the Royal College of St. Patrick in 1795, drawing inspiration from a heritage that includes over 200 years of education and scholarship. Today, Maynooth University is a place of lively contrasts–a modern institution, dynamic, rapidly-growing, research-led and engaged, yet grounded in historic academic strengths and scholarly traditions. With 13,000 students from more than 90 countries, Maynooth offers a range of programmes at undergraduate, Master's and PhD level in the humanities, science and engineering, and social sciences, including business, law, and education. The University also offers a range of international programmes and partnerships. Maynooth's unique collegial culture fosters an interdisciplinary approach to research, which its world-class academics bring to bear in tackling some of the most fundamental challenges facing society today. The University's research institutes and centres consolidate and deliver this impact as vibrant communities of learning, discovery and creation. Research at Maynooth also is very much central to its teaching, and the University prides itself on placing equal value on its research and teaching missions. In addition to being named in THE's Top 50 Under 50, Maynooth University is recognised among the top 350 universities in the world, the top 200 European universities, and as one of the top 200 universities for international connections and outlook. Website: https://www.maynoothuniversity.ie/

III.3.8.2. Role of the organisation <u>in the project</u>

The organisation manages and supports a variety of WPs and tasks as follows:

Manages:

- WP11. Identify Variables and Game Changers

The organization will furthermore support WP3 (Quality Assurance) by collectively participating with other organizations as peer reviewers of project deliverable quality before these are disseminated. The organization will also support WP4 (Effectiveness Evaluation) to ensure improvements to project deliverable quality are identified and fed back to those accountable for product deliverables. This supportive role aims at leveraging the combined expertise of project participants for maximising quality and implementation effectiveness. This approach is based on the paradigm of "wisdom of the crowds" (https://en.wikipedia.org/wiki/The_Wisdom_of_Crowds). The relevant peer review process will be managed by the owners of WP3 and WP4 accordingly. The peer review process will be highly scripted and will be mandatory before official closure of the related tasks. Creating the review script is a task the owner of WP3 and WP4 respectively. The project participants accountable for the results will provide such to a peer review panel and then discuss them in an online conference. The responsibility of the peer review panel will be to use the separately prepared review script to assess the deliverables bevor the conference. The peer reviewers will also join project team events, participate in the regular monthly quality and effectiveness review meetings, and support dissemination efforts. At all times, peer reviewers will be accountable for demonstrating effort made / time spent, attending governance and review meetings, and continuously provide high quality improvement suggestions.

III.3.8.3. Operational/Technical capacity: skills and expertise of key staff involved in the project

Names of the staff members	*Summary of relevant skills and experience, including where relevant a list of recent publications related to the domain of the project.*
Prof. Brian Donnelan	Brian is Vice President of Engagement and Innovation at Maynooth University with over 20 years industrial experience in IT and Innovation Systems Management. He is Chair of Information Systems Innovation Group (www.nuim.ie) and Co-Director of the Innovation Value Institute (www.ivi.ie). See also www.briandonnellan.com.
Dr. Niall Connoley	Niall is Research Fellow at School of Business, Maynooth University with a focus on how to enable sustainable technology adoption, particularly in urban settings. The work addresses strategic alignment of digital strategies with city goals, governance structures and business models. This entails understanding the commercial, social and organisational contexts in which smart technology is deployed in cities so that barriers to implementation can be overcome and system implementations have a greater potential to be successful. Niall is also Vice Chair of the All Ireland Smart City Forum
Dr. Piero Formica	Piero is Senior Research Fellow of the Innovation Value Institute at Maynooth University in Ireland where he leads an international research team on experimentation and simulation of high-expectation start-ups, and Professor of experimental economics at the Contamination Lab, University of Padua. Piero is the winner of the Innovation Luminary Award 2017 (from the Open Innovation Science and Policy Group under the aegis of the European Union). Most recent publications related to the domain of the project: • Formica, P. (2013) The Experimental Nature of New Venture Creation: Capitalizing on Open Innovation 2.0, Springer • Formica, P. (2015) The Role of Creative Ignorance: Portraits of Path Finders and Path Creators, Palgrave Macmillan • Formica, P. (2018) Exploring the Culture of Open Innovation: Towards an Altruistic Model of Economy, Emerald Publishing Group • Formica, P. (2020) Innovation and the Arts: The Value of Humanities Studies for Business, Emerald Publishing Group

III.3.9. Partner number – P9 – Technische Universität Berlin

Organisation name	**Country**
Technische Universität Berlin	**Germany**

III.3.9.1. Aims and activities of the organisation

The Institute for Machine Tools and Factory Management (Institut für Werkzeugmaschinen und Fabrikbetrieb) at the Technische Universität Berlin (IWF-TUB), Germany has conducted extensive research in multiple perspectives of sustainable manufacturing. Researchers at IWF-TUB have examined and demonstrated in research and industrial projects how global value creation through sustainable manufacturing can be superior to traditional paradigms of management and technology. The Department of Handling and Assembly Technology of the IWF-TUB gets its bearing for research and development from industrial and technological tasks. In doing so it is pre-eminent to exploit potentials for innovation from the manifold interactions between product, material, equipment, process, and organization of facilities and their peripherals as well as the consistent implementation of innovative technology and form of organization. The focus is on one hand computer aided assembly planning and control, prototypic realization and experimental testing of assembly processes and systems, application of sensors for assembly processes as well as allocation of work and facility management. On the other hand, the department approaches technological and organizational chances, changes, and challenges of the digitalization in both forward and reverse flows in manufacturing. Website: https://www.hm.tu-berlin.de/menue/handhabungs_und_montagetechnik/parameter/en/.

III.3.9.2. Role of the organisation in the project

The organisation manages and supports a variety of WPs and tasks as follows:

Manages:

- WP13. Create Design Principles for Rapid Diffusion of Innovative Ideas

The organization will furthermore support WP3 (Quality Assurance) by collectively participating with other organizations as peer reviewers of project deliverable quality before these are disseminated. The organization will also support WP4 (Effectiveness Evaluation) to ensure improvements to project deliverable quality are identified and fed back to those accountable for product deliverables. This supportive role aims at leveraging the combined expertise of project participants for maximising quality and implementation effectiveness. This approach is based on the paradigm of "wisdom of the crowds" (https://en.wikipedia.org/wiki/The_Wisdom_of_Crowds). The relevant peer review process will be managed by the owners of WP3 and WP4 accordingly. The peer review process will be highly scripted and will be mandatory before official closure of the related tasks. Creating the review script is a task the owner of WP3 and WP4 respectively. The project participants accountable for the results will provide such to a peer review panel and then discuss them in an online conference. The responsibility of the peer review panel will be to use the separately prepared review script to assess the deliverables bevor the conference. The peer reviewers will also join project team events, participate in the regular monthly quality and effectiveness review meetings, and support dissemination efforts. At all times, peer reviewers will be accountable for demonstrating effort made / time spent, attending governance and review meetings, and continuously provide high quality improvement suggestions.

III.3.9.3. Operational/Technical capacity: skills and expertise of key staff involved in the project

Names of the staff members	*Summary of relevant skills and experience, including where relevant a list of recent publications related to the domain of the project.*
Prof. Dr.-Ing. Franz Dietrich	Prof. Dietrich has project-relevant research experience in manufacturing execution architectures and robot control architectures. Most recent publications related to the domain of the project: • Dietrich, F., Löchte, C., Jeschke, S., & Raatz, A. (2013). An agent-based concept for planning and control of the production of carbon fibre reinforced plastics aircraft structures with mobile production units. In Automation, Communication and Cybernetics in Science and Engineering 2011/2012 (pp. 607-621). Springer, Berlin, Heidelberg. • Dietrich, F., Maaß, J., Hagner, M., Steiner, J., Goltz, U., & Raatz, A. (2013). Dynamic distribution of robot control components under hard realtime constraints–Modeling, experimental results and practical considerations. Journal of Systems Architecture, 59(10), 1047-1066.
Dr.-Ing. Pinar Bilge	Dr. Bilge's research experience is based on conceptual modelling of interactions among metrics and architecture development for manufacturing and end-of-life activities. Most recent publications related to the domain of the project: • Bilge, P., Badurdeen, F., Seliger, G., & Jawahir, I.S. (2014). Model-based approach for assessing value creation to enhance sustainability in manufacturing. Procedia CIRP, 17, 106-111.

III.3.10. Partner number – P10 – University of Padova

Organisation name	Country
University of Padova	**Italy**

III.3.10.1. Aims and activities of the organisation

Established in 1222, the University of Padua (Padova in Italian) is the second oldest university in Italy, after Bologna, and one of the earliest universities in the world. It was originally founded as a school of law by a group of scholars and students who had come from Bologna in pursuit of greater academic freedom. Today, Padua continues to be one of the most prominent universities in Italy and Europe. It is made up of 32 departments and eight schools, which co-ordinate the courses managed by each department, as well as 49 specialisation schools and 43 research and service centres. The University of Padua also runs a host of centres, research organisations and science and technology hubs that are affiliated with the university. Around 60,000 students – 40,000 undergraduates and 20,000 postgraduates – are enrolled at Padua. They share the university's medieval buildings with more than 3,000 professors and research staff, as well as a commitment to the continuation of Padua's longstanding tradition of academic innovation. The university's total budget is over €600 million with around €60 million a year spent on research. Padua is part a network of historical research universities known as the Coimbra Group. Other institutions that are part of this network include the universities of Oxford, Cambridge, Heidelberg, Salamanca, Jena, Leuven and Leiden. The University of Padova has launched in 2016 a dedicated in-house commercial company to exploit and valorise its IP assets and research infrastructures which is the only example as of today in Italy and has gained visibility across the country and beyond as effective tool to support the University in its Third Mission. UniPD will be also a key channel for the project to disseminate the results through the preparation of scientific publications in high impact factor journals as well as foster an open data approach. Through the involvement of Unismart, UniPD will also play a key role in the exploitation of the project results through the industrial network which has been created in the last two years. This will also include secondary applications for the developed knowledge beyond shoes manufacturing to fully value the overall scientific and technological efforts, within a scalable and comprehensive IPR management strategy. Website: https://www.unipd.it/

III.3.10.2. Role of the organisation <u>in the project</u>

The organisation manages and supports a variety of WPs and tasks as follows:

Manages:

- WP14. Implement Research Findings with Experimental Labs

The organization will furthermore support WP3 (Quality Assurance) by collectively participating with other organizations as peer reviewers of project deliverable quality before these are disseminated. The organization will also support WP4 (Effectiveness Evaluation) to ensure improvements to project deliverable quality are identified and fed back to those accountable for product deliverables. This supportive role aims at leveraging the combined expertise of project participants for maximising quality and implementation effectiveness. This approach is based on the paradigm of "wisdom of the crowds" (https://en.wikipedia.org/wiki/The_Wisdom_of_Crowds). The relevant peer review process will be managed by the owners of WP3 and WP4 accordingly. The peer review process will be highly scripted and will be mandatory before official closure of the related tasks. Creating the review script is a task the owner of WP3 and WP4 respectively. The project participants accountable for the results will provide such to a peer review panel and then discuss them in an online conference. The responsibility of the peer review panel will be to use the separately prepared review script to assess the deliverables bevor the conference. The peer reviewers will also join project team events, participate in the regular monthly quality and effectiveness review meetings, and support dissemination efforts. At all times, peer reviewers will be accountable for demonstrating effort made / time spent, attending governance and review meetings, and continuously provide high quality improvement suggestions.

III.3.10.3. Operational/Technical capacity: skills and expertise of key staff involved in the project

Names of the staff members	*Summary of relevant skills and experience, including where relevant a list of recent publications related to the domain of the project.*
Prof. Fabrizio Dughiero	Fabrizio is Vice Rector for Technology Transfer at University of Padova with the main aim to improve the impact of research on economy and innovation of our territory. Besides a passion for bringing innovation into every effort he collaborates intensively with major manufacturing companies across the world to support the transfer of best practices and technologies.
Giovanni Baldassarri	PwC Consultant with relevant experience in operative model design and transformation. Previous experience in large-scale digital transformation projects. Master Degree in Mechanical Engineering, specialized in Production Management.

III.3.11. Partner number – P11 – Hochschule Kaiserslautern

Organisation name	**Country**
Hochschule Kaiserslautern	**Germany**

III.3.11.1. Aims and activities of the organisation

The Hochschule Kaiserslautern sees itself as a modern university for applied sciences and design. Around 6,000 students from more than 80 countries and some 160 professors study, teach, and research in five faculties at the Kaiserslautern, Pirmasens, and Zweibrücken campuses. In 1996, the Hochschule emerged from a department of the former Hochschule Rheinland-Pfalz, which dates back to the mid-19th century, and utilized its independence to devote itself to the core tasks of undergraduate education, academic development, applied research and development and its resulting technology transfer, and to further improve its competitive standing. The application-oriented research & development is mostly carried out in cooperation with businesses. The Hochschule serves as a partner to the local economy, whereby the support given as part of students' employment in a company means that there are many people actively involved in the transfer of knowledge and technology. The active involvement in the knowledge transfer network, twin-rlp, also taps into the potential of the six other (Fach-)Hochschulen in the Rhineland-Palatinate region. In this project, the Centre of Competence OPINNOMETH (Website: www.hs-kl.de/opinnometh) as part of the department business administration will be active in the project. It aims Operational Excellence and Innovation Methodology as an opportunity to jointly grasp and transfer them into one's own corporate reality in a combination of research and practice. Website: www.hs-kl.de.

III.3.11.2. Role of the organisation <u>in the project</u>

The organisation manages and supports a variety of WPs and tasks as follows:

Manages:

- Sub-workpackage to WP6 consisting of structured ideation workshops with participating businesses with ensuing diffusion of innovation tracking.

The organization will furthermore support WP3 (Quality Assurance) by collectively participating with other organizations as peer reviewers of project deliverable quality before these are disseminated. The organization will also support WP4 (Effectiveness Evaluation) to ensure improvements to project deliverable quality are identified and fed back to those accountable for product deliverables. This supportive role aims at leveraging the combined expertise of project participants for maximising quality and implementation effectiveness. This approach is based on the paradigm of "wisdom of the crowds" (https://en.wikipedia.org/wiki/The_Wisdom_of_Crowds). The relevant peer review process will be managed by the owners of WP3 and WP4 accordingly. The peer review process will be highly scripted and will be mandatory before official closure of the related tasks. Creating the review script is a task the owner of WP3 and WP4 respectively. The project participants accountable for the results will provide such to a peer review panel and then discuss them in an online conference. The responsibility of the peer review panel will be to use the separately prepared review script to assess the deliverables bevor the conference. The peer reviewers will also join project team events,

participate in the regular monthly quality and effectiveness review meetings, and support dissemination efforts. At all times, peer reviewers will be accountable for demonstrating effort made / time spent, attending governance and review meetings, and continuously provide high quality improvement suggestions.

III.3.11.3. Operational/Technical capacity: skills and expertise of key staff involved in the project

Names of the staff members	*Summary of relevant skills and experience, including where relevant a list of recent publications related to the domain of the project.*
Prof. Dr.-Ing. Christian M. Thurnes	Christian is Professor at the University of Applied Sciences in Kaiserslautern in Germany with a special interest in the structured creation of ideas at the outset of the diffusion of innovation journey (including relevant gamification). Highly experienced in strategic management, entrepreneurship, and creativity and innovation, he works with a spectrum of industrial organizations and has published over 100 times in this field. He has many years of practical and educational experience in the fields of: • Structured, systematic innovation methods and creativity techniques • Human-centred (e.g. Design Thinking) and Technology-centred (e.g. TRIZ) innovation methodologies and their project-oriented combination with efficiency and quality programs (e.g. Six Sigma, DFSS) • Innovation Management and tools for Innovation management in different branches and sectors • Strategies and principles of innovation foresight as well as methodical approaches to evaluate futures of innovation processes and diffusion Prof. Thurnes has studied Mechanical Engineering (Diplom), Industrial Engineering (Diplom) and Anragogy (M.A.) and his doctoral thesis focused Knowledge-/Competence-Management. He is founder of the Centre of Competence OPINNOMETH, which concentrates on the topics Operational-Excellence- and Innovation-Methodologies. Furthermore he is vice-director of the council for creating the VDI-standard 4521 on “Innovationsmethodik”. He is experienced user, teacher and coach for many different methods and methodologies in education and industries (e.g. TRIZ, Design Thinking, TESE, Directed Evolution, Lego ® Serious Play®, and many more). Most recent publications related to the domain of the project: • Thurnes, C.M.; Graupp, P.; Berendsen, G. et al.: TWI im Gesundheitswesen – das System von innen heraus innovieren. In: Pfannstiel, M.A.; Kassel, K.; Rasche, C. (Hrsg):Innovationen und Innovationsmanagement im Gesundheitswesen. Springer 2021 (im Druck) • Thurnes, C.M.; Hentschel, C.; Zeihsel, F. (Hrsg.): Playing TRIZ - Games and Cases for Learning and Teaching Inventiveness. Kaiserslautern: Synnovating 2019 • Hentschel, C.; Thurnes, C.M.; Zeihsel, F.: Gamitrization – Gamification for Triz-education. In: Cavalluci, Denis; De Guio, Roland; Koziolek, Sebastian (Hrsg). Automated Invention for Smart Industries : 18th International TRIZ Future Conference, TFC 2018, Strasbourg, France, October 29–31, 2018, Proceedings. 1st edition. Aufl. Cham: Springer International PublishingSpringer 2018 S. 29 - 39 (IFIP Advances in Information and Communication Technology ; 541) • Thurnes, C.M.: Bausteine für ein Innovationsmanagement. In: Reuter, Bettina (Hrsg). Motorsport-Management : Grundlagen – Prozesse – Visionen. 1. Aufl. Berlin: Springer Berlin Springer Gabler 2018 S. 58 - 78 • Belski, I.; Cavallucci, D.; Hentschel, C.; Hiltmann, K.; Huber, N.; Koltze, K.; Livotov, P.; Shukhmin, K.; Thurnes, C.M.: Sustainable Education in Inventive Problem Solving with TRIZ and Knowledge-Based Innovation at Universitites. In: Cavalluci, D.; De Guio, R.; Koziolek, S. (Hrsg). TRIZ Future Conference 2018 - Professional Proceedings: Systematic Invention for Smart Industries. Strasbourg: INSA 2018 S. 51 - 73 • Lyubomirskiy, A.; Litvin, S.; Ikovenko, S.; Thurnes, C.M.; Adunka, R.: Trends of Engineering System Evolution (TESE): TRIZ paths to innovation. 1. Aufl. Sulzbach-Rosenberg: TRIZ Consulting Group 2018, ISBN 978-3-00-059846-3

Names of the staff members	*Summary of relevant skills and experience, including where relevant a list of recent publications related to the domain of the project.*
	• Lavrov, A.; Thurnes, C.M.: Forschendes Lernen: Innovationsprinzipien verstehen. In: TRIZ-Innovationsprinzipien: Beispiele aus der Logistik (OPINNOMETH - Schriften des Kompetenzzentrums für Operational Excellence und Innovationsmethodik). Bd. 3. Zweibrücken. 2018 ISSN 2199-0301, S. 3 - 5 • Hiltmann, Kai; Thurnes, Christian M.; Adunka, Robert et al.: Standard VDI 4521 Part 3: Inventive Problem Solving with TRIZ: Problem Solution. In: MATRIZ - the international TRIZ association (Hrsg). Conference proceedings of TRIZfest-2017 - 13th International conference. September 14-16, Krakow, Poland. Krakow. 2017 S. 368 - 373. ISBN 978-0-692-52418-3 • Bicheno, J.; Thurnes, C.M.: Lean-Simulationen und –Spiele. Lean-Prinzipien, -Methoden und –Werkzeuge mit Spielen und Simulationen verstehen und erlernen. Kaiserslautern: Synnovating 2016 • Thurnes, Christian M.; Schönberger, Marius; Sohns, Christoph et al.: Contradiction-based innovation library: creating and sharing innovation impulses. In: ISPIM - International Society for Professional Innovation Management (Hrsg). The XXVII ISPIM Innovation Conference – Blending Tomorrow's Innovation Vintage. Porto. 2016 5 S., ISBN 978-952-265-929-3 • Zeihsel, Frank; Thurnes, Christian M.; Schulze, Jan: Enhancing Patent Portfolio Using TRIZ Workshops. In: ETRIA - The European TRIZ Association (Hrsg). Proceedings of the TRIZ Future Conference 2016. Wroclaw. 2016 5 S. • Thurnes, Christian M.; Zeihsel, Frank; Zlotin, Boris et al.: TRIZ Events Increase Innovative Strength of Lean Product Development Processes. In: Chechurin, L. (Hrsg). Research and Practice on the Theory of Inventive Problem Solving (TRIZ). Switzerland: Springer 2016 S. 187 - 206, ISBN 978-3-319-31780-9 • Näther, Sylvio; Thurnes, Christian M.: TRIZ integration for project managers - discovering further TRIZ benefits. In: MATRIZ - International TRIZ Association (Hrsg). Proceedings of TRIZfest-2016 - 12th International conference - TRIZ and Quality in Design and Manufacturing. July 28-30. Bejing. 2016 S. 380 – 385, ISBN 978-0-692-52418-3 • Adunka, Robert; Czinki, Alexander; Gronauer, Barbara, ...; Thurnes, Christian M. et al.: VDI 4521 Blatt 2 - Entwurf: Zielbeschreibung, Problemdefinition und Lösungspriorisierung. VDI - Verein Deutscher Ingenieure (Hrsg). Berlin: Beuth Verlag 2016 12 S. • Zlotin, Boris; Zusman, Alla; Thurnes, Christian M.: Directed Evolution: Innovationsmanagement und Technologieentwicklung zukunftsorientiert gestalten mit der Methodik der Directed Evolution zur TRIZ-Vorhersage. 1, Auflage in deutscher Sprache, Kaiserslautern: 2015 107 S. ISBN 978-3981549324 • Thurnes, Christian M.; Zeihsel, Frank: Gamificated linking of LEAN and TRIZ for training and education. In: Silva Gomes, J.F.; Meguid, S.A. (Hrsg). Proceedings of the 6th International Conference on Mechanics and Materials in Design, 26-30 July 2015. P. Delgada - Azores. 2015 S. 1337 - 1342, ISBN 978-989-98832-3-9 • Thurnes, Christian M.: Innovation und Fehler - ein untrennbares Paar. In: Visnepolschi, Svetlana: Der innovative Weg zu Null Fehler - Aktuelle Methoden der Antizipierenden Fehlererkennung AFE. 1. Aufl. Kaiserslautern: 2015 S. 3 - 7, ISBN 978-3981549317 • Adunka, Robert; Czinki, Alexander; Gronauer, Barbara; Götz, Kurt; Hartschen, Michael; Hentschel, Claudia; Hiltmann, Kai; Huber, Norbert; Koltze, Karl; Livotov, Pavel; Lohe, Rainer; Mayer, Oliver; Meier, Jürgen; Miecznik, Bert; Mohnkopf, Hermann; Müller, Wolfgang; Nähler, Horst; Scherb, Bruno; Schnittker, Frank C.; Shub, Leonid; Souchkov, Valeri; Thurnes, Christian; Wigger, Tobias: VDI-Richtlinie 4521: Blatt 1 Erfinderisches Problemlösen mit TRIZ - Grundlagen und Begriffe. VDI-Gesellschaft (Hrsg). Berlin: Beuth Verlag 2015 • Hiltmann, Kai; Adunka, Robert; Livotov, Pavel; Mayer, Oliver; Thurnes, Christian M.; Müller, Wolfgang: Wertanalyse und VDI 4521 Erfinderisches Problemlösen mit TRIZ. In: VDI Wissensforum GmbH (Hrsg). Wertanalyse Praxis 2015. Düsseldorf. 2015 S. 73 - 77 ISBN 978-3-942980-49-4 • Schüßler, I.; Thurnes, C.M.: Lernkulturen in der Weiterbildung. Bielefeld: wbv 2005 148 S. ISBN 3-7639-1845-0

III.3.12. Partner number – P12 – GB Innovation Ltd.

Organisation name	Country
GB Innovation Ltd.	**Ireland**

III.3.12.1. Aims and activities of the organisation

GB Innovation Ltd. was incorporated in Ireland in 2014 and provides clients with expertise in the field of R&D. Using an internally developed software tool (ReaDI-Watch) clients are provided with an R&D framework which allows a quantified analysis of R&D processes. The analysis then provides suggested improvements in order to achieve a high level of excellence in R&D, with compliancy to international standardisation. GB Innovation Ltd. services mainly SMEs in Ireland, and also works with the Fraunhofer Gesellschaft in Germany. Website: https://gbinnovation.ie/

III.3.12.2. Role of the organisation in the project

This is a business participant in the project and primarily responsible for providing a case study at the outset of the project, verifying the robustness of the simulation tool developed, verifying the robustness of the design principles created, validating the overall simulation model in practice and piloting the career framework as it develops. The participant will support a single two hour virtual workshop for WP9 and separate minimum one day face-to-face workshops each for WP8, WP10, WP11, WP13 and WP14 which will either be hosted at their participating regional institute of higher education or on their premises with a minimum of two participants. Furthermore, support for WP6 is required in the form of creating / piloting a structured ideation case study and by continuously acting as pilot users for learning solutions developed. The effort involved in supporting WP6 will be integrated with face-to-face workshops and supported by self-paced and web-based micro-learning solutions. As a business participant they are furthermore invited to annual team events at their own costs and voluntary participation in WP3, WP4 and WP5. Business participants are not required to contribute any intellectual property to the project, yet if so it will be formally managed via WP3.

The organization will furthermore support WP3 (Quality Assurance) by collectively participating with other organizations as peer reviewers of project deliverable quality before these are disseminated. The organization will also support WP4 (Effectiveness Evaluation) to ensure improvements to project deliverable quality are identified and fed back to those accountable for product deliverables. This supportive role aims at leveraging the combined expertise of project participants for maximising quality and implementation effectiveness. This approach is based on the paradigm of "wisdom of the crowds" (https://en.wikipedia.org/wiki/The_Wisdom_of_Crowds). The relevant peer review process will be managed by the owners of WP3 and WP4 accordingly. The peer review process will be highly scripted and will be mandatory before official closure of the related tasks. Creating the review script is a task the owner of WP3 and WP4 respectively. The project participants accountable for the results will provide such to a peer review panel and then discuss them in an online conference. The responsibility of the peer review panel will be to use the separately prepared review script to assess the deliverables bevor the conference. The peer reviewers will also join project team events, participate in the regular monthly quality and effectiveness review meetings, and support dissemination efforts. At all times, peer reviewers will be accountable for demonstrating effort made / time spent, attending governance and review meetings, and continuously provide high quality improvement suggestions.

III.3.12.3. Operational/Technical capacity: skills and expertise of key staff involved in the project

Names of the staff members	*Summary of relevant skills and experience, including where relevant a list of recent publications related to the domain of the project.*
Dr. Fiona Sammler	• Mechanical Engineer (Bachelors and Masters degrees from University College Dublin) • PhD in Manufacturing (Technische Universität Berlin) • Over 10 years' experience in fundamental and applied R&D (University and Fraunhofer Gesellschaft) in the manufacturing field, ranging from EU projects to a wide variety of Germany-based publicly funded projects (BMBF, AiF, BMWi, DFG)

Names of the staff members	*Summary of relevant skills and experience, including where relevant a list of recent publications related to the domain of the project.*
	• International expert for cutting tools/coatings in VDI, ISO and DIN standardisation processes • 5 years' experience with GB Innovation Ltd. working on development of software tool to analyse R&D processes. • Professor for Manufacturing at Technische Universität Berlin since April 2018 Most recent publications related to the domain of the project: • Minton, T.; Ghani, S.; Sammler, F.; Bateman, R.; Fürstmann, P.; Roeder, M.: Temperature of internally-cooled diamond-coated tools for dry-cutting titanium. International Journal of Machine Tools and Manufacture 75 (2013), 27 - 35. • Wardle, F.; Minton, T.; Ghani, S.; Fuerstmann, P.; Roeder, M.; Richarz, S.; Sammler, F.: Artificial Neural Networks for Controlling the Temperature of Internally Cooled Turning Tools. Modern Mechanical Engineering 3 (2013), 1 - 10. • Uhlmann, E.; Sammler, F.: CVD coated diamond tools for the machining of lightweight materials. Advanced Materials Research 907 (2014), 63 - 73. • Uhlmann, E.; König, J.; Sammler, F.; Richarz, S.: Tribology of treated and coated cutting tool surfaces. Encyclopedia of Tribology, Springer Verlag, 2014, 3896 - 3905. • Uhlmann, E.; Flögel, K.; Sammler, F.; Rieck, I.; Dethlefs, A.: Machining of Hypereutectic Aluminium Silicon Alloys. Procedia CIRP 14 (2014), 348 - 354. • Uhlmann, E.; Sammler, F.; Meixner, M.; Heinrich, D.; Gansert, F.; Reimers, W.; Berger, D.; Rieck, I.: Analysis of residual stresses and wear mechanism of CVD diamond coated cemented carbide tools. Production Engineering Research & Development 9 (2015) 1, S. 99 - 107. • Sammler, F.: Steigerung der Nutzungspotenziale von CVD-diamantbeschichteten Werkzeugen, Fraunhofer Verlag, 2015. • "Byrne, G.; Ahearne, E.; Cotterell, M.; Mullany, B.; O'Donnell, G.E.; Sammler, F.: High Performance Cutting (HPC) in the New Era of Digital Manufacturing - A Roadmpa. Procedia CIRP 46 (2016), 1-6. • Uhlmann, E.; Stawiszynski, B.; Leyens, C.; Heinze, S.; Sammler, F. : Hard turning of hot work and cold work steels with HiPIMS and DCMS TiAlN coated carbide inserts. Procedia CIRP 46 (2016), 591-594. • Uhlmann, E.; Richarz, S.; Sammler, F; Hufschmied, R.: High Speed Cutting of carbon fibre reinforced plastics. Procedia Manufacturing 6 (2016), 113-123. • Uhlmann, E.; Sammler, F. et. Al: Machining of Carbon and Fibre Reinforced Composites. Procedia CIRP 46 (2016) 63-66. • Uhlmann, E. et. Et.: Solutions for Sustainable Machining. Journal of Manufacturing Science & Engineering 139 (2017) 5. • Byrne, G.; Sammler, F; Byrne, D.: A New Universal Indicator to assess and quantify the Research Readiness Level (RRL) for Excellence in Applied Research, Development & Innovation. R&D Management Conference, Milan, 2018.
David Byrne	• Benchmarking and strategic analysis of R&D • Development and implementation of ReaDI-Watch digital platform for R&D optimisation in SMEs • Roadmapping in SMEs • Studied International Business and Finance Most recent publications related to the domain of the project: • Byrne, G.; Sammler, F; Byrne, D.: A New Universal Indicator to assess and quantify the Research Readiness Level (RRL) for Excellence in Applied Research, Development & Innovation. R&D Management Conference, Milan, 2018.

III.3.13. Partner number – P13 – University of Luxembourg

Organisation name	Country
University of Luxembourg	**Luxembourg**

III.3.24.1. Aims and activities of the organisation

University of Luxembourg (UL) has approx. 6.200 students from all over the globe. As one of the youngest universities in Europe, the UL was founded in 2003 in line with the Bologna process. The research teams and about 600 PhD students work in three faculties and three interdisciplinary centres. According to the Times Higher Education (THE) ranking 2016-2017, the UL is ranked #178. In addition, The University of Luxembourg ranks #11 worldwide in the Young University Rankings 2017. Website: https://wwwde.uni.lu/

III.3.24.2. Role of the organisation in the project

The organization supports WP3 (Quality Assurance) by collectively participating with other organizations as peer reviewers of project deliverable quality before these are disseminated. The organization will also support WP4 (Effectiveness Evaluation) to ensure improvements to project deliverable quality are identified and fed back to those accountable for product deliverables. This supportive role aims at leveraging the combined expertise of project participants for maximising quality and implementation effectiveness. This approach is based on the paradigm of "wisdom of the crowds" (https://en.wikipedia.org/wiki/The_Wisdom_of_Crowds). The relevant peer review process will be managed by the owners of WP3 and WP4 accordingly. The peer review process will be highly scripted and will be mandatory before official closure of the related tasks. Creating the review script is a task the owner of WP3 and WP4 respectively. The project participants accountable for the results will provide such to a peer review panel and then discuss them in an online conference. The responsibility of the peer review panel will be to use the separately prepared review script to assess the deliverables bevor the conference. The peer reviewers will also join project team events, participate in the regular monthly quality and effectiveness review meetings, and support dissemination efforts. At all times, peer reviewers will be accountable for demonstrating effort made / time spent, attending governance and review meetings, and continuously provide high quality improvement suggestions.

III.3.24.3. Operational/Technical capacity: skills and expertise of key staff involved in the project

Names of the staff members	*Summary of relevant skills and experience, including where relevant a list of recent publications related to the domain of the project.*
Prof. Peter Plapper	Prof. Peter Plapper is a full Professor for Tool Machines and Production Technologies at the University of Luxembourg, Faculty FSTC; Luxembourg and the program director (directeur d'études) of the Master of Science in Engineering - Sustainable Product Creation. From 1994 to 2010, he had increasing responsibility in relation to operational and strategic planning of manufacturing facilities and equipment at Adam Opel and General Motors in Europe and America. Different management positions, involving the development of global manufacturing strategy for Body Shop and General Assembly in 5 plants worldwide. Most recent publications related to the domain of the project: • Plapper, Peter; Oberhausen, Christof; Minoufekr, Meysam: "Application of Value Stream Management to enhance product and information flows in supply chain networks - based on the example of web-based automotive retail business in Management and Production Engineering Review (2018), 9(2), 13-19 • Oberhausen, Christof; Minoufekr, Meysam; Plapper, Peter „Standardized Value Stream Management Method to Visualize, Analyze and Optimize Cross-Enterprise Value Stream Data" in International Journal of Standardization Research (2017), 15(2), 25-36 • Oberhausen, Christof; Plapper, Peter: "Cross-enterprise value stream assessment " in Journal of Advances in Management Research (2017), 14(2), 182-193

Names of the staff members	*Summary of relevant skills and experience, including where relevant a list of recent publications related to the domain of the project.*
	• Plapper, Peter: „Value Stream Management zur Synchronisation im Unternehmensverbund“ Invited Speaker at „Bundestagung der Deutschen MTM-Vereinigung“, Stuttgart, Germany (2016, October) • Oberhausen, Christof; Weber, Daniel; Plapper, Peter: „Value Stream Management in high variability production systems“ in SSRG International Journal of Industrial Engineering (2015), 2(1), 4 • Oberhausen, Christof; Plapper, Peter: „Value Stream Management in the Lean Manufacturing Laboratory“ in Procedia CIRP (2015, July), 32 • Plapper, P.; André, Chr: „Wertstrommehtode-Value Stream Mapping” In: Gläbe, R.; Thomann, H.J. (eds.): Qualitätsmanagement in Dienstleistungsunternehmen. vol. 34. Ed. Köln: TÜV Media, 2011 – ISBN 978-3-8249-1469-2, pp. 1-27
Dr. Meysam Minoufekr	Dr. Meysam Minoufekr focusses on Big Data in Manufacturing and Supply Chains with a focus on Value Stream Management in the context of Lean Management and Operational Excellence. He leads the Operational Excellence and Industry 4.0 group, as a part of Prof. Plapper’s team. He has worked as a CTO in a CAD/CAM software company developing software for automated manufacturing systems. Through his activities as at Fraunhofer IPT, he gained extensive experience in managing and realizing projects on national and EU level. Most recent publications related to the domain of the project: • Business analytics in manufacturing: Current trends, challenges and pathway to market leadership by Omar, Yamila; Minoufekr, Meysam; Plapper, Peter • Optimized and flexible scheduling of AGVs and process machines in Re-manufacturing 4 .0 Systems using multi-agent technology and simultaneous scheduling by Groß, Sebastian; Gerke, Wolfgang; Plapper, Peter • Simulation-based optimization using multi-agent technology for efficient and flexible production planning and control in remanufacturing by Groß, Sebastian UL; Gerke, Wolfgang; Plapper, Peter UL • Deriving essential components of lean and industry 4.0 assessment model for manufacturing SMEs by Kolla, Sri Sudha Vijay Keshav UL; Minoufekr, Meysam UL; Plapper, Peter UL • Maximum flow of complex manufacturing networks by Omar, Yamila UL; Plapper, Peter UL • A survey: The usage of Augmented Reality in Industry by Gallala, Abir UL; Hichri, Bassem UL; Plapper, Peter UL • Industry 4.0 – Implementation of an automated assembly line in a wooden modular house production plant: The case Leko Labs by de Vincenzo, Vincenzo UL; Hichri, Bassem UL; Plapper, Peter UL

III.3.14. Partner number – P14 – Airholding - Embraer Research and Technology Europe

Organisation name	**Country**
Airholding - Embraer Research and Technology Europe	**Portugal**

III.3.14.1. Aims and activities of the organisation

The EMBRAER RESEARCH AND TECHNOLOGY EUROPE (EMBRT) is the European arm of the Embraer Research and Technology Unit, and is part of Airholding SA, a full European subsidiary of Embraer S.A. The EMBRT is mostly involved in collaborative projects, up to TRL 7, with partners in Europe and elsewhere. The EMBRT aims, at high level, to bring value to the Embraer group by 1) fostering strategic relationships with European networks of partners and suppliers, 2) creating, exploiting and sustaining new, European based, technology and business streams, and 3) contribute to the overall of aviation safety improvement. In specific, the EMBRT is mainly active in projects related with cyber-physical systems, future propulsion, automation, sustainability and mobility. The EMBRT benefits from Embraer 50 year heritage of successful aircraft design, production, certification and support and more than 14

years collaboration with European partners in Framework and National European R&I programmes. The EMBRT can complement its expertise with know-how from the Embraer group, extending its capabilities. Airholding is a full Portuguese subsidiary of Embraer, pursuing business in engineering, services, manufacturing of aerospace related products. It also owns and manages Embraer participation in OGMA, an MRO and Aerostructures Manufacture company in Portugal. Website: www.pt.embraer.com

III.3.14.2. Role of the organisation in the project

This is a business participant in the project and primarily responsible for providing a case study at the outset of the project, verifying the robustness of the simulation tool developed, verifying the robustness of the design principles created, validating the overall simulation model in practice and piloting the career framework as it develops. The participant will support a single two hour virtual workshop for WP9 and separate minimum one day face-to-face workshops each for WP8, WP10, WP11, WP13 and WP14 which will either be hosted at their participating regional institute of higher education or on their premises with a minimum of two participants. Furthermore, support for WP6 is required in the form of creating / piloting a structured ideation case study and by continuously acting as pilot users for learning solutions developed. The effort involved in supporting WP6 will be integrated with face-to-face workshops and supported by self-paced and web-based micro-learning solutions. As a business participant they are furthermore invited to annual team events at their own costs and voluntary participation in WP3, WP4 and WP5. Business participants are not required to contribute any intellectual property to the project, yet if so it will be formally managed via WP3.

The organization will furthermore support WP3 (Quality Assurance) by collectively participating with other organizations as peer reviewers of project deliverable quality before these are disseminated. The organization will also support WP4 (Effectiveness Evaluation) to ensure improvements to project deliverable quality are identified and fed back to those accountable for product deliverables. This supportive role aims at leveraging the combined expertise of project participants for maximising quality and implementation effectiveness. This approach is based on the paradigm of "wisdom of the crowds" (https://en.wikipedia.org/wiki/The_Wisdom_of_Crowds). The relevant peer review process will be managed by the owners of WP3 and WP4 accordingly. The peer review process will be highly scripted and will be mandatory before official closure of the related tasks. Creating the review script is a task the owner of WP3 and WP4 respectively. The project participants accountable for the results will provide such to a peer review panel and then discuss them in an online conference. The responsibility of the peer review panel will be to use the separately prepared review script to assess the deliverables bevor the conference. The peer reviewers will also join project team events, participate in the regular monthly quality and effectiveness review meetings, and support dissemination efforts. At all times, peer reviewers will be accountable for demonstrating effort made / time spent, attending governance and review meetings, and continuously provide high quality improvement suggestions.

III.3.14.3. Operational/Technical capacity: skills and expertise of key staff involved in the project

Names of the staff members	*Summary of relevant skills and experience, including where relevant a list of recent publications related to the domain of the project.*
Dr. Ricardo Reis	Dr. Ricardo Reis is Technical Leader at the Embraer Engineering and Technology Europe. He is an Aerospace Engineer degree with a PhD in Mechanical Engineering for CFD and High Performance Computing. He coordinated and participated in several RD projects either National or European funded. These projects span from future aircraft concept design configurations to composite materials characterization, Industry 4.0 and aircraft systems. Role: will provide context and input for specific use cases related with innovation process from low TRL to market. Namely taking into account existence of different departments and companies interfaces and external partners. He will also interlink with the aerospace industrial ecosystem actors in Portugal and in the Embraer group to provide value added insight to the project. Most recent publications related to the domain of the project: • FASTEN: EU-Brazil cooperation in IoT for manufacturing. The Embraer use Ricardo Reis, Flávio Diniz, Luciana Mizioka, Rosana Yamasaki, Gléverson Lemos, Marta Quintiães, Ruben Menezes, Narciso Caldas, Roberto Vita, Ralph Schultz, Rafael

Names of the staff members	*Summary of relevant skills and experience, including where relevant a list of recent publications related to the domain of the project.*
	Arrais and Ariane Pereira MATEC Web Conf., 304 (2019) 04007 DOI: https://doi.org/10.1051/matecconf/201930404007 • FASTEN: an IoT platform for manufacturing. Embraer use case. Ricardo Reis, Flávio Diniz, Luciana Mizioka, Paula Olivio, Gléverson Lemos, Marta Quintiães, Ruben Menezes, Flávio Amadio and Narciso Caldas MATEC Web Conf., 233 (2018) 00009 DOI: https://doi.org/10.1051/matecconf/201823300009 • Hypersonic transatmospheric and exoatmospheric vehicle design using the SUAVE tool. Gonçalves, P.M., Lino da Silva, M., dos Reis, R.J.N. et al. CEAS Space J (2019). https://doi.org/10.1007/s12567-019-00283-7 • Low fidelity models applied to the numerical investigation of hypersonic propulsion. Pedro M. Goncalves, Carlos Silva, Mário Silva and Ricardo Reis. AIAA 2018-0636 Published Online:7 Jan 2018 https://doi.org/10.2514/6.2018-0636

III.3.15. Partner number – P15 – BERD – Bridge Engineering Research & Design, S.A.

Organisation name	Country
BERD – Bridge Engineering Research & Design, S.A.	**Portugal**

III.3.15.1. Aims and activities of the organisation

BERD's foundation dates back to 2006, when BERD appeared on the market as a spin-off of the Engineering Faculty of Porto's University (FEUP), following Pedro Pacheco's – BERD's founder – doctoral thesis on Organic Prestressing System (OPS). OPS is a patented solution based on a kind of artificial muscle used in falsework (temporary support structures) to build bridges. BERD also developed M1, a construction equipment that only became viable in combination with OPS technology. The company is experienced in bridge construction industry for more than 10 years and occupies the top 3rd rank worldwide in the area of solutions for bridge engineering. It employs 40 workers (mostly mechanical and structural engineers) and exports 100% of its production. Being based in Portugal, its main geographical markets are Spain, Belgium, Germany, Turkey, Brazil, Colombia and Peru, with clients such as Ochtief, Pavasal and Eurovia. In 2016, BERD created a new business unit to develop innovative Modular Bridge Solutions (MBS), for increased resilience and rapid reestablishment of damaged infrastructure, creating or improving major transportation routes or enabling temporary access to construction sites and special events. MBS solution are applicable to permanent bridges and not only temporary ones. MBS developed four main models MB30, MB60, MB80 and LMB-120, for spans up to 30, 60, 80 and 120m respectively. All these models are embedded with innovative solutions to attain higher resistant and stiffer structures, better assembly and ease of transportation in standard 20" or 40" containers. the LBM-120 bridge represents a new range of modular bridges since the market was offering solutions only up to 90m. Besides the MBS standard models, the company developed tailor made solutions in order to address the specific needs of populations and the increasing demands of its clients worldwide. Recently MBS delivered 148 bridges with spans between 15 and 60m long to the Peruvian government. These bridges will be assembled all over the country to suppress the lack of infrastructures in remote areas. MBS adopted MB60 and designed the new MB36 to better fit to the client requirements. Website: www.mbs.berd.eu and www.berd.eu.

III.3.15.2. Role of the organisation <u>in the project</u>

This is a business participant in the project and primarily responsible for providing a case study at the outset of the project, verifying the robustness of the simulation tool developed, verifying the robustness of the design principles created, validating the overall simulation model in practice and piloting the career framework as it develops. The participant will support a single two hour virtual workshop for WP9 and separate minimum one day face-to-face workshops each for WP8, WP10, WP11, WP13 and WP14 which will either be hosted at their participating regional institute of higher education or on their premises with a minimum of two participants. Furthermore, support for WP6 is required in the form of creating / piloting a structured ideation case study and by continuously acting as pilot users for learning solutions developed. The effort involved in supporting WP6 will be integrated with face-to-face workshops

and supported by self-paced and web-based micro-learning solutions. As a business participant they are furthermore invited to annual team events at their own costs and voluntary participation in WP3, WP4 and WP5. Business participants are not required to contribute any intellectual property to the project, yet if so it will be formally managed via WP3. The organization will furthermore support WP3 (Quality Assurance) by collectively participating with other organizations as peer reviewers of project deliverable quality before these are disseminated. The organization will also support WP4 (Effectiveness Evaluation) to ensure improvements to project deliverable quality are identified and fed back to those accountable for product deliverables. This supportive role aims at leveraging the combined expertise of project participants for maximising quality and implementation effectiveness. This approach is based on the paradigm of "wisdom of the crowds" (https://en.wikipedia.org/wiki/The_Wisdom_of_Crowds). The relevant peer review process will be managed by the owners of WP3 and WP4 accordingly. The peer review process will be highly scripted and will be mandatory before official closure of the related tasks. Creating the review script is a task the owner of WP3 and WP4 respectively. The project participants accountable for the results will provide such to a peer review panel and then discuss them in an online conference. The responsibility of the peer review panel will be to use the separately prepared review script to assess the deliverables bevor the conference. The peer reviewers will also join project team events, participate in the regular monthly quality and effectiveness review meetings, and support dissemination efforts. At all times, peer reviewers will be accountable for demonstrating effort made / time spent, attending governance and review meetings, and continuously provide high quality improvement suggestions.

III.3.15.3. Operational/Technical capacity: skills and expertise of key staff involved in the project

Names of the staff members	*Summary of relevant skills and experience, including where relevant a list of recent publications related to the domain of the project.*
José Matos Fernandes	MBA by Porto Business School and degree in Civil Engineering by FEUP. Has over 19 years of professional experience. Is currently responsible for the BERD Modular Bridges Business Unit. He began his career as construction sub-director in the project of the Casa da Música do Porto and later took over as global construction manager, having been involved in some reference works at national level, such as Power Upgrade of the Bemposta and Venda Nova III hydroelectric power plant, the Holy Trinity Church of Fatima and the New Coimbra Pediatric Hospital. In 2015, he worked in Colombia as a production manager, having been responsible for the production of a Portuguese company in projects related to office and residential buildings. Also at the international level, he was in the genesis of setting up a subsidiary of the DVM Group in the United Kingdom by preparing a business plan and later creating the modular bridges business unit at BERD. Most recent publications related to the domain of the project: • New Span Range on Modular Bridges – The Arch Relevance. António André, Inês Ferraz, Hugo Coelho, José Fernandes e Pedro Pacheco. Arch2019 – 9th International Conference on Arch Bridges • New Modular Bridge Solutions. António André, José Fernandes, Inês Ferraz e Pedro Pacheco. SteelBridges 2018 • A André et al 2018 IOP Conf. Ser.: Mater. Sci. Eng. 419 012021 • New Modular Bridge Solutions to Spans up to 120m. António André, Diogo Carvalho, José Fernandes e Pedro Pacheco. XI Congresso de Construção Metálica e Mista. Novembro 2017 • New Modular Bridges Solutions—A sustainable Solution to Connect People. António André, José Fernandes, Igor Soares e Pedro Pacheco. InCrease2017, Outubro 2017
Dr. António Morgado André	PhD in Civil Engineering by FEUP, MSc in Structures from the same faculty and a degree in Civil Engineering by IST. Throughout his academic and professional career, he has been Invited Professor at the Department of Civil Engineering at the University of Algarve for 16 years and was a structural designer and consultant. At BERD, he worked since it's foundation as a senior consultant and designer collaborating on the development of multi-member components. He is currently product manager at Modular Bridges Solutions. As project director, he also has skills in the design, and design review of reinforced concrete structures (with or without prestressing), steel and composite structures, wood and masonry structures.

Names of the staff members	*Summary of relevant skills and experience, including where relevant a list of recent publications related to the domain of the project.*
	Most recent publications related to the domain of the project: • New Span Range on Modular Bridges – The Arch Relevance. António André, Inês Ferraz, Hugo Coelho, José Fernandes e Pedro Pacheco. Arch2019 – 9th International Conference on Arch Bridges • New Modular Bridge Solutions. António André, José Fernandes, Inês Ferraz e Pedro Pacheco. SteelBridges 2018 • A André et al 2018 IOP Conf. Ser.: Mater. Sci. Eng. 419 012021 • New Modular Bridge Solutions to Spans up to 120m. António André, Diogo Carvalho, José Fernandes e Pedro Pacheco. XI Congresso de Construção Metálica e Mista. Novembro 2017 • New Modular Bridges Solutions—A sustainable Solution to Connect People. António André, José Fernandes, Igor Soares e Pedro Pacheco. InCrease2017, Outubro 2017

III.3.16. Partner number – P16 – EXMceuticals Portugal, Lda

Organisation name	**Country**
EXMceuticals Portugal, Lda	**Portugal**

III.3.16.1. Aims and activities of the organisation

EXMceuticals, Portugal RD&I, IP, Refining and Product Development. EXMceuticals Portugal (EXM) is driven to provide RD&I activities for a) high-quality cannabis-based ingredients, b) innovative and real-life products and c) IP that can support the development of new products and services. EXM develops the RD&I activities in Tec Labs, a start-up incubator from Faculdade de Ciências, Universidade de Lisboa. EXM is the nervous system of EXMceuticals Inc living system, as it is where RD&I activities are taking place. The company obtained the authorization for cannabis R&D activities from INFARMED, the Portuguese National Authority of Medicines and Health Products, in November 2019. This authorization allows EXM to make a huge step forward in its European operations by being able to import, research and refine cannabinoids and cannabis-based ingredients. Fully operational R&D laboratory will develop cannabis-based formulations for medical and healthcare space and operate as a pilot scale refinery for the transformation of cannabis-based ingredients. The company is very dynamic in establishing strategic partnerships, including Universidade Nova de Lisboa, Universidade Lusofona de Humanidades e Tecnologias and with companies from several sectors ranging from Wellness to Medical and Pharmaceutical. EXM is on process of submitting 2 research projects focusing on cannabis-based therapeutics and cannabinoids green extraction-purification processes. EXM is going from RD&I moving towards a refining facility which will comply to European Union's GMP Standards. Website: www.exmceuticalspt.com

III.3.16.2. Role of the organisation in the project

This is a business participant in the project and primarily responsible for providing a case study at the outset of the project, verifying the robustness of the simulation tool developed, verifying the robustness of the design principles created, validating the overall simulation model in practice and piloting the career framework as it develops. The participant will support a single two hour virtual workshop for WP9 and separate minimum one day face-to-face workshops each for WP8, WP10, WP11, WP13 and WP14 which will either be hosted at their participating regional institute of higher education or on their premises with a minimum of two participants. Furthermore, support for WP6 is required in the form of creating / piloting a structured ideation case study and by continuously acting as pilot users for learning solutions developed. The effort involved in supporting WP6 will be integrated with face-to-face workshops and supported by self-paced and web-based micro-learning solutions. As a business participant they are furthermore invited to annual team events at their own costs and voluntary participation in WP3, WP4 and WP5. Business participants are not required to contribute any intellectual property to the project, yet if so it will be formally managed via WP3.

The organization will furthermore support WP3 (Quality Assurance) by collectively participating with other organizations as peer reviewers of project deliverable quality before these are disseminated. The organization will also support WP4 (Effectiveness Evaluation) to ensure improvements to project deliverable quality are identified and fed back to those accountable for product deliverables. This supportive role aims at leveraging the combined expertise of project participants for maximising quality and implementation effectiveness. This approach is based on the paradigm of "wisdom of the crowds" (https://en.wikipedia.org/wiki/The_Wisdom_of_Crowds). The relevant peer review process will be managed by the owners of WP3 and WP4 accordingly. The peer review process will be highly scripted and will be mandatory before official closure of the related tasks. Creating the review script is a task the owner of WP3 and WP4 respectively. The project participants accountable for the results will provide such to a peer review panel and then discuss them in an online conference. The responsibility of the peer review panel will be to use the separately prepared review script to assess the deliverables bevor the conference. The peer reviewers will also join project team events, participate in the regular monthly quality and effectiveness review meetings, and support dissemination efforts. At all times, peer reviewers will be accountable for demonstrating effort made / time spent, attending governance and review meetings, and continuously provide high quality improvement suggestions.

III.3.16.3. Operational/Technical capacity: skills and expertise of key staff involved in the project

Names of the staff members	*Summary of relevant skills and experience, including where relevant a list of recent publications related to the domain of the project.*
Prof. Susana Santos	• Since January 2019: Consultant at EXMceuticals, Portugal Lda. • Since May 2019 - Chief of Innovation Officer (CIO) at EXMceuticals, Portugal Lda. Role: Formulate, implement and communicate the Company innovation strategy. Promote the development of scientific and technological research translating it to innovation projects for the development of new products and services. Main interests: a) applying scientific knowledge to healthcare and wellness; b) biotechnology strategies for therapeutic and wellness purposes; c) evaluation of phytochemicals with potential therapeutic usage; d) uncovering solutions that enable phytochemicals based product innovation and scale; e) address and contribute to solve the innovation bottlenecks across a product value chain; f) go-to market strategies according to stakeholders demand. • Since 2009: Assistant Professor at Faculty of Engineering, Universidade Lusófona de Humanidades e Tecnologias (FE-ULHT) of several subjects related to Genetics, Molecular Biology, and Biotechnology, Food-Biotechnology and Forensics. • Researcher at Center for Interdisciplinary Development and Research on Environment, Applied Management & Space (DREAMS) at FE-ULHT and at the Center of Structural Chemistry (CQE) at Instituto Superior Técnico-Universidade Nova de Lisboa (IST-UNL). • 2013-2018: Co-founder of HeartGenetics, Genetics and Biotechnology. Role: Chief of Technology Officer and Director of Quality Management System. Development of genetic tests with application in cardiovascular pathologies, pharmacogenetics, cardio-oncology, nutrigenetics, and athletic performance. HeartGenetics pioneers a methodology that integrate Genomics and Computational Technologies to make available innovative knowledge that helps healthcare providers to promote wellness, prevent illness and diagnose diseases. • Academic profile: PhD in Molecular Biology (Lisbon's Faculty of Sciences) and Post-Doc in Molecular Biology (Lisbon´s Faculty of Pharmacy) developing R&D in the subject of Genetics of Cardiovascular Diseases. As a researcher of Lisbon´s Faculty of Pharmacy and Lisbon´s Instituto Superior Técnico coordinated a national project (Cardiogenetics) and participated in more than 10 national projects (Cardiogenetics and Cancer). Published over 10 scientific papers, a book chapter and over 25 posters and oral communications. Most recent publications related to the domain of the project: • Conde, J.; Larguinho, M.; Cordeiro, A.; Raposo, L.R.; Costa, P.M.; Santos, S.; Diniz, M.S.; Fernandes, A.R.; Baptista, P.V.; Gold-nanobeacons for gene therapy: evaluation of genotoxicity, cell toxicity and proteome profiling analysis, Nanotoxicology 08/2014; 8(5):521532.. DOI:10.3109/17435390.2013.802821

Names of the staff members	*Summary of relevant skills and experience, including where relevant a list of recent publications related to the domain of the project.*
	• Silva, A.; Luís, D.; Santos, S.; Silva, J.; Mendo, A.S.; Coito, L.; Silva, T.F.S.; Guedes da Silva, M.F.C.; Martins, L.M.D.R.S.; Pombeiro, A.J.L.; Borralho, P.; Rodrigues, C.M.; Cabral, G.; Videira, P.; Monteiro, C.; Fernandes, A.R.; Biological characterization of the antiproliferetive potential of Co(II) and Sn(IV) coordination compounds in human cancer cell lines: a comparative proteomic approach, Drug Metabolism and Drug Interactions 28 (2013) 167-176. • Santos, S., Freitas, A.T. & Fernandes A.R. 2014. Overview of HCM genomics and transcriptomics: molecular tools in HCM assessment for application in clinical medicine. Cardiovascular Disease. ISBN: 978-1-922227-28-7. iConcept Press. Retrieved from http://www.iconceptpress.com/books/cardiovascular-disease
Prof. Adilia Charmier	• Since January 2019: Consultant of EXMceuticals Portugal Lda • Since March 2019: Chief executive Officer (CEO) of the R&D company EXMceuticals Portugal Lda in the field of Biotecnology using green technologies for the extraction of natural products and the characterization of the active purified compounds. • Full Professor and Director of the undergraduated Biotechnology and Biotechnology Engineering courses as well as the Postgraduate Program in Circular Economy at Universidade Lusófona ULHT (Lisbon, Portugal). She dedicated her academic career to the teaching of disciplines in the areas of General Chemistry, Organic Chemistry and Chemistry of natural products, supervisor of several national and international students of Masters, PhD and international postdoctoral researchers • Coordinator of the research center DREAMS at the Faculty of Engineering of ULHT (Center for Interdisciplinary Development and Research on Environment, Applied Management & Space) and researcher at the center of Structural Chemistry (CQE) at IST-UNL(Portugal). • Scientific research includes the various areas of extraction of medicinal plants and wastes using green and biological technologies, as well as the synthesis of Metal-coordinated compounds to produce new biologically active products and their applications in the areas of health, pharmaceutical, nutraceuticals and biomaterials. In addition, she develops scientific research as well as the creation of joint courses in the area of the Circular Economy in partnership with the group IMAT, University of Trier, IfaS, Germany. She has developed and supervised numerous research projects funded by international companies as well as consulting in the Canadian company EXMceuticals. • 68 national and international scientific publications distributed by peer-reviewed international journals, conferences and 3 patents, as well as the organization of national and international seminars and conferences. • Academic profile: PhD in Organic Chemistry (1993), Université Blaise Pascal (France).
Filipa Ferro	• Since April 2019: Management support at EXMceuticals Portugal, Lda • MSc. on Environmental Engineering, branch of Management and Environmental Systems (2013) and certified trainer. • Project manager of CIMULACT (H2020) at Mediatedomain, Lda., a project that aimed to engage citizens and several other actors in the co-creation of European Research and Innovation agendas, and responsible for the implementation of the Human Brain Project (H2020 FET Flagship Project) public consultations in Portugal in 2017. • Collaboration in national and international participatory projects mainly focused on the protection and management of coastal areas and marine environment such as PosMARGov, a follow-up project of the national awarded project MARGov – Collaborative Governance of the Protected Marine Areas, and MARLISCO (FP7). • Collaboration in the implementation of the participatory workshops of OPERAs (FP7) in Portugal. • Experience in design, organisation and facilitation of collaborative and participatory processes and multiple stakeholder events; conception and implementation of environmental awareness and educational activities, as well as training activities; creation of communication materials and elaboration of dissemination and communication strategies; social media management; and Science communication.

Names of the staff members	*Summary of relevant skills and experience, including where relevant a list of recent publications related to the domain of the project.*
	Most recent publications related to the domain of the project: • Ferro, F. (2017) Environmental Mediation:an instrument for collaborative decision making in territorial planning. Finisterra – Portuguese Journal of Geography

Cândida Rocha	• Since January 2019: Consultant at EXMceuticals, Portugal Lda.
	• Since March 2019 – Waste Management Officer at EXMCeuticals, Portugal Lda.
	• Key qualifications:
	  o Exceptional capacity for organization of large communication events, involving a large number of stakeholders from various backgrounds, acquired by working as communication and event organizer expert in national and international funded project and by working as General Secretary of the Portuguese Association of Environmental Engineering.
	  o Over 12 years of professional experience in management of development projects, with large communication activities, in multi stakeholder environments, gained mainly by coordinating national and EU funded projects as General Secretary and by working as Project Manager for different private and public clients (Aveiro University, EDV Energia etc.), including in developing countries (Sao Tome and Principe);
	  o Excellent ability and experience to conceptualise and implement communication strategies, action plans and campaigns;
	  o Extensive experience in working with media (radio, television, newspapers, etc), social media, and familiar in the use of various communication tools (web, advertising, etc.), accrued by working as coordinator of Communication Plans in national and EU funded project;
	  o Over 15 years' experience at achieving excellent results in facilitating trainings, stakeholder meetings and roundtables, lecturing, teaching and coaching;
	  o Extensive experience in developing key messages and communicating complex issues as climate change, circular economy, waste management and rural development to the broader public in an accessible and concise manner;
	  o Over 15-year experience in organizing national and international conferences, congresses and seminars;
	  o Excellent writing and reporting skills, including media news and preparation and drafting comprehensive wide-themed reports.

Nuno Oliveira	• Since February 2017: Ecosystem Manager at Esporão S.A. Management of biodiversity and ecosystem services in the context of organic farming and nature conservation; RD&I projects - functional biodiversity; ecosystem services; sustainability reporting; ecotourism & nature conservation; storytelling & public speaking; stakeholder engagement strategy; delegate at BCSD Portugal, the national representative of the World Business Council for Sustainable Development. Company's representative in the H2020 Project 'PROSEU – 'Prosumers for the Energy Union' and representative at the Wines of Alentejo Sustainability Plan. • Expert Ecologist in the areas of Biodiversity and Ecosystem Services Assessment and Valuation. Supporting the consultancy team on developing methodological approaches to evaluate, assess and manage Biodiversity and Ecosystem Services in the context of Forestry Regional Plans for two Portuguese regions - Alentejo and Oeste • Consultancy in various areas relates to Agroecology, Biodiversity and Ecosystem Services, Strategic Environmental Assessment, Sustainability Strategies and Reporting, Business Strategy applied research, and project development. Some examples: Applied Research on Ecosystem Services and Natural Capital Valuation; Multiple Presentations / Lectures by invitation, Biodiversity & Ecosystem Services, Natural Capital, Biomimicry; Consultancy for Esporão SA in Agroecology, Sustainability & Strategic Management: Reporting; Business Ecosystem Analysis & Management; Marketing and Social Media Contents; Ecosystem Services assessment, classification and valuation, both for projects in Portugal and Africa; Sustainability

Names of the staff members	*Summary of relevant skills and experience, including where relevant a list of recent publications related to the domain of the project.*
	Analysis / Development of Strategic Marketing Plans for SMEs for the agroforestry, tourism, construction and environmental consultancy sectors; Development of Communication / Social Media contents within the framework of organisational Marketing Strategies for Sustainability. • Invited Lecturer, ISEG – IDEFE Post-Graduate in Sustainability Management. Expert in Sustainability Strategic Management, Module of Environmental Management and Sustainability – Biomimicry, Ecosystem services, Business Ecosystems, Circular Economy, Bioeconomy. Most recent publications related to the domain of the project: • Campos, I., Marín-González, E., Luz, G., Barroso, J., & Oliveira, N. (2019). Renewable Energy Prosumers in Mediterranean Viticulture Social–Ecological Systems. Sustainability, 11(23), 6781. • Dziedzic, A.; Smyth, B.; Oliveira, N.G and Simões, A. 2013. Special Report 'Sustainability and Tourism - A Review of Tendencies and Trends with Future Visions and Recommendations. CIGEST-ISG • Master's thesis co-supervision - Abreu, D. A. C. D. (2018). A economia circular na visão estratégica de uma empresa portuguesa. Master's thesis co-supervision, DREAMS – Lusófona University.

III.3.17. Partner number – P17 – AUSYS s.r.o.

Organisation name	Country
AUSYS s.r.o.	**Slovakia**

III.3.17.1. Aims and activities of the organisation

A company AUSYS s.r.o.is focused on automation systems in the industry, deploying new control and monitoring technologies. Portfolio consists from the design and production of machines and production lines and also providing engineering services for PLC and HMI programming, robotic manipulators, vision / camera systems, design and implementation of machine safety, risk assessment and electrical project documentation. They are also providing production of electrical cabinets and wiring of machines and lines, supply of hardware and automation components and service works in manufacturing factories. Website: https://ausys.sk/en/

III.3.17.2. Role of the organisation in the project

This is a business participant in the project and primarily responsible for providing a case study at the outset of the project, verifying the robustness of the simulation tool developed, verifying the robustness of the design principles created, validating the overall simulation model in practice and piloting the career framework as it develops. The participant will support a single two hour virtual workshop for WP9 and separate minimum one day face-to-face workshops each for WP8, WP10, WP11, WP13 and WP14 which will either be hosted at their participating regional institute of higher education or on their premises with a minimum of two participants. Furthermore, support for WP6 is required in the form of creating / piloting a structured ideation case study and by continuously acting as pilot users for learning solutions developed. The effort involved in supporting WP6 will be integrated with face-to-face workshops and supported by self-paced and web-based micro-learning solutions. As a business participant they are furthermore invited to annual team events at their own costs and voluntary participation in WP3, WP4 and WP5. Business participants are not required to contribute any intellectual property to the project, yet if so it will be formally managed via WP3. The organization will furthermore support WP3 (Quality Assurance) by collectively participating with other organizations as peer reviewers of project deliverable quality before these are disseminated. The organization will also support WP4 (Effectiveness Evaluation) to ensure improvements to project deliverable quality are identified and fed back to those accountable for product deliverables. This supportive role aims at leveraging the combined expertise of project participants for maximising quality and implementation effectiveness. This approach is based on the paradigm of "wisdom of the crowds" (https://en.wikipedia.org/wiki/The_Wisdom_of_Crowds). The relevant peer review process will be managed by the owners of WP3 and WP4 accordingly. The peer review process will be highly scripted and will be mandatory before official closure of the related tasks. Creating the review script is a task the owner of WP3 and WP4 respectively. The project participants accountable for the results will provide such to a peer review panel and then discuss them in an online conference. The responsibility of the peer review panel will be to use the separately prepared review script to assess the deliverables bevor the conference. The peer reviewers will also join project team events, participate in the regular monthly quality and effectiveness review meetings, and support dissemination efforts. At all times, peer reviewers will be accountable for demonstrating effort made / time spent, attending governance and review meetings, and continuously provide high quality improvement suggestions.

III.3.17.3. Operational/Technical capacity: skills and expertise of key staff involved in the project

Names of the staff members	*Summary of relevant skills and experience, including where relevant a list of recent publications related to the domain of the project.*
Dipl. Ing. Tomáš Gazda	Project coordinator, CEO of the company, 8 years of experience in automation industry as designers, programmer and safety technician.
Dipl. Ing. Miroslav Kmec, PhD.	Electrotechnical engineer with PhD. Degree, member of Slovak Electrotechnical Society, 5 years of experience in automation industry. Most recent publications related to the domain of the project: • Possibilities of Using Facts Devices In Power System / Roman Jakubčák, Ľubomír Beňa, Miroslav Kmec - 2013.In: Acta Electrotechnica et Informatica. Roč. 13, č. 3 (2013), s. 8-11. - ISSN 1335-8243. Available at: http://www.aei.tuke.sk/papers/2013/3/2013-3.htm#JAKUBCAK. • Effect of thermal ageing on the oil-paper insulation / Lukáš Lisoň, Iraida Kolcunová, Miroslav Kmec - 2014.In: Acta Electrotechnica et Informatica. Roč. 14, č. 4 (2014), s. 23-26. - ISSN 1335-8243. Available at: http://www.aei.tuke.sk/papers/2014/4/2014-4.htm. • Influence of parallel line mutual coupling on distance relay operation / Miroslav Kmec, Ľubomír Beňa, Lukáš Lisoň - 2014.In: Acta Electrotechnica et Informatica. Roč. 14, č. 4 (2014), s. 35-41. - ISSN 1335-8243. Available at: http://www.aei.tuke.sk/papers/2014/4/2014-4.htm. • Relative permitivitty and dissipation factor of oil paper insulation / Lukáš Lisoň ... [et al.] - 2014.In: Current Problems of Maintenance of Electrical Equipment and Management. - Košice : TU, 2014 S. 197-203. - ISBN 978-80-553-1818-9

Names of the staff members	*Summary of relevant skills and experience, including where relevant a list of recent publications related to the domain of the project.*
	• Effect of series FACTS devices on distance relays / Miroslav Kmec, Ľubomír Beňa, Lukáš Lisoň - 2015.In: Elektroenergetika 2015. - Košice : TU, 2015 S. 564-567. - ISBN 978-80-553-2187-5
Dipl. Ing. Viliam Verčimák	CEO of the company, 8 years of experience in automation industry as designers and programmer. Most recent publications related to the domain of the project: • PAVLÍK, Marek - ZBOJOVSKÝ, Ján - GERMAN-SOBEK, Martin - HRINKO, Marián, Vision of project Desertec, In: Renewable Energy Sources : proceedings IP 2012 : 8. - 17.6.2012, Špičák – Železná Ruda, Czech Republic. - Plzeň : ZU, 2012 P. 19-22. - ISBN 978-80-261-0130-7. • ZBOJOVSKY, Jan - HOCKO, Pavol - PAVLIK, Marek - KIRALY, Jozef, Operation of hydropower plants in Slovakia, In: Renewable Energy Sources : proceedings IP 2012 : 8. - 17.6.2012, Špičak -Železna Ruda, Czech Republic. - Plzeň : ZU, 2012 P. 99-102. - ISBN 978-80-261-0130-7 • Martin German-Sobek, Marek Pavlik, Samuel Bucko, Energy utilization of biomass in the region of east Slovakia, In: Proceedings of the Intensive Programme 2014 : Perspectives for the development of low-power systems using biomass in the context of the EU energy policy for the Central European region : July 6th to 17th, 2014, Pardubice, Czech Republic. - Plzeň : ZČU, 2014 P. 217-221. – ISBN 978-80-261-0356-1. • Additional modification of thermomagnetic properties of objects of low relative permeability in electromagnetic field / Dušan Medveď ... [et al.] - 2017.In: Acta Physica Polonica A. Vol. 131, no. 4 (2017), p. 1138-1140. - ISSN 0587-4246 • Check measurements of magnetic flux density: Equipment design and the determination of the confidence interval for EFA 300 measuring devices / Pavol Liptai ... [et al.] - 2017. In: Measurement. Vol. 111 (2017), p. 51-59. - ISSN 0263-2241

III.3.18. Partner number – P18 – Sabanci University

Organisation name	**Country**
Sabanci University	**Turkey**

III.3.18.1. Aims and activities of the organisation

Established in 1996, Sabanci University (SU) is a modern and successful university founded in 1996 and since then, has continued to progress and raise their standards in academic excellence. According to the Entrepreneurial and Innovative University Index of the Scientific and Technological Research Council of Turkey (TUBITAK), SU has been internationally recognized as one of the most innovative and research-oriented universities in Turkey. SU is among the top three universities in Turkey and it is currently ranked 44th in the Times Higher Education Young University Rankings, an exceptional accomplishment after having competed with the best international universities aged 50 years or under. The University employs more than 700 staff members and teaches to 4100 undergraduate and 1100 graduate students. The research activities at SU aim to enrich educational programs while contributing to social and economic development at regional, national and international level. SU aspires to become an international reference point for innovation in education in research, adapting an interdisciplinary educational infrastructure at the institute. Their mission is twofold: to develop internationally competent and confident individuals, enriched with the ability to reflect critically and independently, combined with a strong sense of social responsibility; and to contribute to the development of science and technology on a global level, as well as disseminating the knowledge created to the benefit of the community. Website: https://www.sabanciuniv.edu/en/

III.3.18.2. Role of the organisation in the project

This is a business participant in the project and primarily responsible for providing a case study at the outset of the project, verifying the robustness of the simulation tool developed, verifying the robustness of the design principles created, validating the overall simulation model in practice and piloting the career framework as it develops. The participant will support a single two hour virtual workshop for WP9 and separate minimum one day face-to-face workshops each for WP8, WP10, WP11, WP13 and WP14 which will either be hosted at their participating regional institute of higher education or on their premises with a minimum of two participants. Furthermore, support for WP6 is required in the form of creating / piloting a structured ideation case study and by continuously acting as pilot users for learning solutions developed. The effort involved in supporting WP6 will be integrated with face-to-face workshops and supported by self-paced and web-based micro-learning solutions. As a business participant they are furthermore invited to annual team events at their own costs and voluntary participation in WP3, WP4 and WP5. Business participants are not required to contribute any intellectual property to the project, yet if so it will be formally managed via WP3. The organization will furthermore support WP3 (Quality Assurance) by collectively participating with other organizations as peer reviewers of project deliverable quality before these are disseminated. The organization will also support WP4 (Effectiveness Evaluation) to ensure improvements to project deliverable quality are identified and fed back to those accountable for product deliverables. This supportive role aims at leveraging the combined expertise of project participants for maximising quality and implementation effectiveness. This approach is based on the paradigm of "wisdom of the crowds" (https://en.wikipedia.org/wiki/The_Wisdom_of_Crowds). The relevant peer review process will be managed by the owners of WP3 and WP4 accordingly. The peer review process will be highly scripted and will be mandatory before official closure of the related tasks. Creating the review script is a task the owner of WP3 and WP4 respectively. The project participants accountable for the results will provide such to a peer review panel and then discuss them in an online conference. The responsibility of the peer review panel will be to use the separately prepared review script to assess the deliverables bevor the conference. The peer reviewers will also join project team events, participate in the regular monthly quality and effectiveness review meetings, and support dissemination efforts. At all times, peer reviewers will be accountable for demonstrating effort made / time spent, attending governance and review meetings, and continuously provide high quality improvement suggestions.

III.3.18.3. Operational/Technical capacity: skills and expertise of key staff involved in the project

Names of the staff members	*Summary of relevant skills and experience, including where relevant a list of recent publications related to the domain of the project.*
Dr. Lutfi Taner Tunc	Taner Tunc is the project lead for SU. Dr. Tunc is a member of the Faculty of Engineering and Natural Sciences at Sabanci University, affiliated with Manufacturing Engineering Program. He got his BSc in Mechanical Engineering in 2004 from Middle East Technical University in Ankara, Turkey. Then, he continued his studies on modelling of machining operations, specifically for 5-axis milling and passed his MSc (2006) and PhD (2010) diplomas in Sabanci University. His research interests include modelling of machining operations together with machine tool dynamics for 5-axis machining. He is focusing on robotic manufacturing, composite manufacturing technologies such as composite machining and automated fibre layup. Also, the excellence and motivation of Dr. Tunc is demonstrated by his election as a research affiliate at the renowned International Academy for Production Engineering (CIRP). In addition of his academic research activities published in high impact journals, Dr. Tunc has very close contact with a large number of international companies, notably from the aerospace industry. Most recent publications related to the domain of the project: • Tunc, L. T., Zatarain, M. (2019). Stability optimal selection of stock shape and tool axis in finishing of thin-wall parts. CIRP Annals. • Tunc, L. T. (2019). Tunc, L. T. (2019). Smart tool path generation for 5-axis ball-end milling of sculptured surfaces using process models. Robotics and Computer-Integrated Manufacturing, 56, 212-221. • Tunc, L. T., Mohammadi, Y., Budak, E. (2018). Destabilizing effect of low frequency modes on process damped stability of multi-mode milling systems. Mechanical Systems and Signal Processing, 111, 423-441.

Names of the staff members	*Summary of relevant skills and experience, including where relevant a list of recent publications related to the domain of the project.*
	• Tunc, L. T., Stoddart, D. (2017). Tool path pattern and feed direction selection in robotic milling for increased chatter-free material removal rate. The International Journal of Advanced Manufacturing Technology, 89(9-12), 2907-2918. • Tunc, L. T., Budak, E., Bilgen, S., Zatarain, M. (2016). Process simulation integrated tool axis selection for 5-axis tool path generation. CIRP Annals-Manufacturing Technology, 65(1), 381-384. • Tunc, L. T., Shaw, J. (2016). Investigation of the effects of Stewart platform-type industrial robot on stability of robotic milling. The International Journal of Advanced Manufacturing Technology, 87(1-4), 189-199. • Tunc, L. T., Shaw, J. (2016). Experimental study on investigation of dynamics of hexapod robot for mobile machining. The International Journal of Advanced Manufacturing Technology, 84(5-8), 817-830. • Budak, E., Ozturk, E., Tunc, L. T. (2009). Modeling and simulation of 5-axis milling processes. CIRP Annals-Manufacturing Technology, 58(1), 347-350.

III.3.19. Partner number – P19 – Edelweiss Connect GmbH

Organisation name	Country
Edelweiss Connect GmbH	**Switzerland**

III.3.19.1. Aims and activities of the organisation

Edelweiss Connect (previously known as Douglas Connect and renamed to Edelweiss Connect as from February 2019) is a Swiss SME located in Basel, specialised in developing and implementing R&D projects, communities and collaboration to transfer solutions for industrial use and advance regulatory acceptance. EwC has experience in scientific research integrating data, in silico and in vitro methods and related infrastructure, and has been involved in organising scientific, communication and knowledge management and solutions development projects since 2008 (https://edelweissconnect.com/). EwC served as Project Coordinator of the OpenTox FP7 project which developed an Open Source Predictive Toxicology Framework for the management of toxicology data, algorithms, models and validation. EwC was the Scientific Coordinator of ToxBank, project which developed the infrastructure and predictive toxicology support resources within the SEURAT-1 program. Between February 2014 and January 2017, EwC coordinated eNanoMapper. EwC is currently coordinating OpenRiskNet, a project funded within Horizon 2020 EINFRA-22-2016 Programme, with the main objective to develop an open e-Infrastructure providing data resources and analysis, modelling, simulation and prediction services to a variety of communities requiring risk assessment, including chemicals, cosmetic ingredients, therapeutic agents and nanomaterials. EwC is also involved in EU H2020 projects ACEnano, NanoCommons and EU-ToxRisk, with an important role in building knowledge sharing infrastructure, modelling and community outreach. EwC led the Eurostar's project ToxHQ whose goal was to commercialise new methods in predictive toxicology and risk assessment through establishing industry-driven solutions and an integrating business ecosystem. Website: https://www.edelweissconnect.com/

III.3.19.2. Role of the organisation <u>in the project</u>

The organization will furthermore support WP3 (Quality Assurance) by collectively participating with other organizations as peer reviewers of project deliverable quality before these are disseminated. The organization will also support WP4 (Effectiveness Evaluation) to ensure improvements to project deliverable quality are identified and fed back to those accountable for product deliverables. This supportive role aims at leveraging the combined expertise of project participants for maximising quality and implementation effectiveness. This approach is based on the paradigm of "wisdom of the crowds" (https://en.wikipedia.org/wiki/The_Wisdom_of_Crowds). The relevant peer review process will be managed by the owners of WP3 and WP4 accordingly. The peer review process will be highly scripted and will be mandatory before official closure of the related tasks. Creating the review script is a task the owner of WP3 and WP4 respectively. The project participants accountable for the results will provide such to a peer review panel and then discuss them in an online conference. The responsibility of the peer review panel will be to use the separately prepared review script to assess the deliverables bevor the conference. The peer reviewers will also join project team events, participate in the regular monthly quality and effectiveness review meetings, and support dissemination efforts. At all

times, peer reviewers will be accountable for demonstrating effort made / time spent, attending governance and review meetings, and continuously provide high quality improvement suggestions.

III.3.19.3. Operational/Technical capacity: skills and expertise of key staff involved in the project

Names of the staff members	*Summary of relevant skills and experience, including where relevant a list of recent publications related to the domain of the project.*
Dr. Barry Hardy	Dr. Barry Hardy (M), is the Chief Executive Officer (CEO) at Edelweiss Connect. Dr Barry Hardy is leading Edelweiss Connect and its team supporting the development of new integrating solutions in industrial safety assessment. He has coordinated the OpenTox project in predictive toxicology and the ToxBank infrastructure development project. He is currently President of the OpenTox Association, founded in 2015 as an international non-profit organisation promoting an open knowledge community approach to new methods in predictive toxicology. He recently led the infrastructure development for the IMI EBiSC stem cell banking project and the eNanoMapper project developing OpenTox solutions supporting nanotechnology safety assessment. New projects include leading OpenRiskNet, knowledge infrastructure development for ACEnano and Eu-ToxRisk and translation of research methods to industrial practice within ToxHQ. Most recent publications related to the domain of the project: • Hardy, B; The Growing Significance of Communities & Collaboration in Discovery & Development, Future Medicinal Chemistry, Vol 1, Issue 2, Spring 2009. • Hardy, B. et al., Collaborative Development of Predictive Toxicology Applications, Journal of Cheminformatics 2010, 2:7, 31 August 2010. • Hardy, B., Apic, G., Carthew, P., et al. (2012). A toxicology ontology roadmap. ALTEX 29, 129-137. • Hardy, B., Apic, G., Carthew, P., et al. (2012). Toxicology ontology perspectives. ALTEX 29, 139-156. • Kohonen, P., Hardy, B., "The ToxBank Data Warehouse: Supporting the Replacement of In Vivo Repeated Dose Systemic Toxicity Testing", Molecular Informatics, Special Issue: Advances in Computational Toxicology, (2013), Volume 32, Issue 1, 47–63 • Leist M, Ghallab A, Graepel R, ..., Hardy B, et al., Adverse outcome pathways: opportunities, limitations and open questions, Arch Toxicol. 2017 Nov;91(11):3477-3505. • Fadeel B, Farcal L, Hardy B, Vázquez-Campos S, Hristozov D, Marcomini A, Lynch I, Valsami-Jones E, Alenius H, Savolainen K, Advanced tools for the safety assessment of nanomaterials, Nature Nanotechnology, 2018, DOI: 10.1038/s41565-018-0185-0 • Oki N., Farcal L., Abdelaziz A., Florean O., Doktorova T., Exner T., Kohonen P., Grafström R., Hardy B., Integrated analysis of in vitro data and the adverse outcome pathway framework for prioritization and regulatory applications: An exploratory case study using publicly available data on piperonyl butoxide and liver models, Toxicology In Vitro, 2018, DOI: 10.1016/j.tiv.2018.09.002

III.3.20. Partner number – P20 – University of Bremen

Organisation name	Country
University of Bremen	**Germany**

III.3.20.1. Aims and activities of the organisation

The University of Bremen is a medium-sized German university with around 20,000 students. Bremen offers a wide range of subjects for its committed and talented students: More than 100 masters programs and bachelor programs, as well as the state law exam. Moreover, with research-based learning, the university has reinterpreted project studies, a defining feature originating from when it was founded. As part of the European university network YUFE - Young Universities for the Future of Europe – it is developing a new model for European higher education together with seven other universities. 2,300 academics (43%), among them 270 professors (32% women), teach and carry out research in a wide range of disciplines. We have a long established tradition in interdisciplinary cooperation and excellent research in natural sciences, engineering, the social sciences and the humanities, as well as in teacher training. From 2012-2019, the university of Bremen with its Institutional Strategy "Ambitious and Agile" was one of eleven universities that held the title of "University of Excellence." The issues of today's and future societies are dealt with in six interdisciplinary, high profile areas focused on the oceans and the global climate, the future of industrial production, the social conflicts of modern welfare states, the interfaces between digital technology and humans, the logistics of global supply chains, and equity in health care. The marine sciences are particularly prominent with their Cluster of Excellence that has been continually funded since 2006. Website: www.uni-bremen.de.

III.3.20.2. Role of the organisation in the project

The organization will furthermore support WP3 (Quality Assurance) by collectively participating with other organizations as peer reviewers of project deliverable quality before these are disseminated. The organization will also support WP4 (Effectiveness Evaluation) to ensure improvements to project deliverable quality are identified and fed back to those accountable for product deliverables. This supportive role aims at leveraging the combined expertise of project participants for maximising quality and implementation effectiveness. This approach is based on the paradigm of "wisdom of the crowds" (https://en.wikipedia.org/wiki/The_Wisdom_of_Crowds). The relevant peer review process will be managed by the owners of WP3 and WP4 accordingly. The peer review process will be highly scripted and will be mandatory before official closure of the related tasks. Creating the review script is a task the owner of WP3 and WP4 respectively. The project participants accountable for the results will provide such to a peer review panel and then discuss them in an online conference. The responsibility of the peer review panel will be to use the separately prepared review script to assess the deliverables bevor the conference. The peer reviewers will also join project team events, participate in the regular monthly quality and effectiveness review meetings, and support dissemination efforts. At all times, peer reviewers will be accountable for demonstrating effort made / time spent, attending governance and review meetings, and continuously provide high quality improvement suggestions.

III.3.20.3. Operational/Technical capacity: skills and expertise of key staff involved in the project

Names of the staff members	*Summary of relevant skills and experience, including where relevant a list of recent publications related to the domain of the project.*
Dr. Otthein Herzog	• 18 years of industry experience, • 16 years of experience as chaired professor of Artificial Intelligence at Universitaet Bremen, • Founder and director of the research and technology transfer Centre for Computing and Communication Technologies (TZI), • PI of the FP7 Integrated Project WearIT@Work and of numerous other EU, BMBF and DFG projects. • Co-PI of the DFG Collaborative Research Center on "Autonomous Cooperating Logistics Processes – A Paradigm Shift and its Limitations"

Names of the staff members	*Summary of relevant skills and experience, including where relevant a list of recent publications related to the domain of the project.*
	Dr. Herzog is a Fellow of the German National Academy of Science and Engineering - acatech and of the Informatics Association Germany. He has published more than 280 refereed international scientific contributions. Most recent publications related to the domain of the project: • Jan Ole Berndt; Otthein Herzog (2016). Anticipatory Behavior of Software Agents in Self-Organizing Negotiations. In M. Nadin (ed.). Anticipation across Disciplines. Springer International Publishing: Berlin, pp. 231-253. • Warden, T.; Porzel, R.; Gehrke, J.; Langer, H.; Herzog, O.; Malaka, R.(2011). Knowledge Management for Agent-based Control under Temporal Bounds. In Hülsmann, M.; Scholz-Reiter, B.; Windt, K. (eds.). Autonomous Cooperation and Control in Logistics: Contributions and Limitations - Theoretical and Practical Perspectives. Springer: Heidelberg, pp. 229-246. • Stefan Kirn; Otthein Herzog; Peter Lockemann; Otto Spaniol (eds.) (2006). Multiagent Engineering - Theory and Applications in Enterprises. Springer: Heidelberg. • Timm, I.J.; Scholz, T.; Krempels, K.-H.; Herzog, O.; Spaniol, O. (2006). From Agents to Multiagent Systems. Chapter I.2. In Kirn, S. et al. (eds.). Multiagent Engineering – Theory and Applications in Enterprises. Springer: Heidelberg, pp. 35-51. • Otthein Herzog; Thomas Schildhauer (eds.) (2009). Intelligente Objekte: Technische Gestaltung – Wirtschaftliche Verwertung – Gesellschaftliche Wirkung. acatech DISKUTIERT. Springer: Heidelberg • Florian Pantke, Stefan Edelkamp, Otthein Herzog (2014). Planning with Numeric Key Performance Indicators over Dynamic Organizations of Intelligent Agents. In Jörg P. Müller, Michael Weyrich, Ana L.C. Bazzan (eds.). Multiagent Systems Technologies - Proc. 12th German Conference on Multiagent System Technologies (MATES 2014), Stuttgart, Germany, September 23-25, 2014. Springer: Heidelberg, Berlin, DOI: 10.1007/978-3-319-11584-9_10, pp. 138-155. (Best paper award).

III.3.21. Partner number – P21 – Impetus Solutions

Organisation name	Country
Srikari Impetus Solutions Pvt. Ltd.	**India**

III.3.21.1. Aims and activities of the organisation

Srikari Impetus Solutions (Impetus) is headquartered in Hyderabad with specialized in providing custom software development services in wide variety of domains and technologies with 100+ employees. With over a decade of experience in technical consulting and software development, Impetus empowers our clients to focus on core business. We take care of the solution with precision detail and diligent understanding of the requirements from concept to delivery.

We at Impetus - understand the requirements of the intended solution scope to the core. Think along with the client from concept to realization and provide extensive support post-delivery. Impetus provides services using various technologies on Web, Desktop, PDA and Mobile devices, Distributed Computing / Middleware, Component Tech, Databases, Algorithm / Processing, Operating Systems, Driver Development / Low Level Windows Application Development, Scripting etc.

The company's motto is "Best Quality at Optimal Cost". Adhering to the highest quality of output in every project that we undertake is a source of great pride to us.

We have worked on wide range of technologies mentioned below:

- 4IR technologies (Machine Learning, Artificial Intelligence, Natural Language processing (Chatbots) and Block chain)

- Computer Vision
- Server less solutions and Strategies (Azure and AWS)
- IOT
- e-Commerce
- Big Data Analytics
- Media Solutions (4K video streaming with Setup Boxes)
- Digital Marketing Solutions - Content Management
- Mobile and Web Development
- Enterprise Application integration
- Business Process Automation
- System programming – Device Drivers
- Complex ERP Solutions

Impetus is ISO 9001:2015 certified and follows the procedures according to the ISO standards.

Website: http://impetus-solutions.com/

III.3.21.2. Role of the organisation in the project

The organization provides overall IT development and technical support services to all WPs of the project with a special emphasis on building and maintaining the simulation solution.

The organization will furthermore support WP3 (Quality Assurance) by collectively participating with other organizations as peer reviewers of project deliverable quality before these are disseminated. The organization will also support WP4 (Effectiveness Evaluation) to ensure improvements to project deliverable quality are identified and fed back to those accountable for product deliverables. This supportive role aims at leveraging the combined expertise of project participants for maximising quality and implementation effectiveness. This approach is based on the paradigm of "wisdom of the crowds" (https://en.wikipedia.org/wiki/The_Wisdom_of_Crowds). The relevant peer review process will be managed by the owners of WP3 and WP4 accordingly. The peer review process will be highly scripted and will be mandatory before official closure of the related tasks. Creating the review script is a task the owner of WP3 and WP4 respectively. The project participants accountable for the results will provide such to a peer review panel and then discuss them in an online conference. The responsibility of the peer review panel will be to use the separately prepared review script to assess the deliverables bevor the conference. The peer reviewers will also join project team events, participate in the regular monthly quality and effectiveness review meetings, and support dissemination efforts. At all times, peer reviewers will be accountable for demonstrating effort made / time spent, attending governance and review meetings, and continuously provide high quality improvement suggestions.

III.3.21.3. Operational/Technical capacity: skills and expertise of key staff involved in the project

Names of the staff members	*Summary of relevant skills and experience, including where relevant a list of recent publications related to the domain of the project.*
P. Venkateswarulu	• Determine operational feasibility by evaluating analysis, problem definition, requirements, solution development and proposed solutions • Improve operations by conducting systems analysis; recommending changes in policies and procedures • Conduct meetings • Requirement tracking • Co-ordinate with multiple teams • Testing the functional flow as per the standards defined • Expert in VC++, COM, DCOM, Microsoft .NET, XML Web Services, W CF and Workflow foundation 4.0 • Expert in MTS, MSMQ and COM+ • Good experience Device Drivers and building Antivirus suits • Expert on ASP.NET, MVC, WCF, Web API, Workflows, Windows Identity Management • Good experience in Asp.net security such as securing the Web API and WCF services

Names of the staff members	*Summary of relevant skills and experience, including where relevant a list of recent publications related to the domain of the project.*
	• Expert on deploying the MVC applications on Azure Cloud and utilizing Azure SDKs such as DocumentDB, BlobStorage, AppInsight.
G.S.Lokesh	• 10+ year in IT Industry • Good experience in designing and implementing the solutions on AWS and since last 5 years with .net and Node JS • Experience in designing and implementation in enterprise solution with highly scalability for Cloud and On Prem. • Extensive experience on Enterprise application Integration such as BizTalk and ESB (Enterprise Service Bus) • Expert in designing/implementing/deploying Microservices on AWS • Hands on experience with AWS VPC infrastructure. (Creating and configuring VPC, SUBNETS, NATGATEWAYS, and Internet Gateways, direct connect.) • Hands on experience with Creating IAM users and Policies with writing custom managed policies and using AWS managed policies. • Prepare the service application to consume the data from the Database using WCF. • Involved in design and development of the application using ASP.NET Web API, with No SQL Server as the back end. • Working Experience on Device Drivers and development of Antivirus Suits

III.3.22. Partner number – P22 – Kaunas University of Technology

Organisation name	Country
Kaunas University of Technology **Faculty of Social Sciences, Arts and Humanities**	**Lithuania**

III.3.22.1. Aims and activities of the organisation

Kaunas University of Technology (KTU) is the leading Lithuanian university that provides a wide range of studies and closely cooperates with business. The University provide studies in the fields of engineering, physical and social sciences, arts and humanities. The research groups that carry out research at KTU contribute to the global scientific knowledge by conducting cutting edge interdisciplinary research related with the most important and up-to-date issues. The University's mission is to provide the research-based studies at international level; to develop and to transfer knowledge and innovative technologies for sustainable development of the State and development of innovations; to create an open creative environment which inspires talents and leaders. The Faculty of Social Sciences, Arts and Humanities at KTU aims to become an intellectual, creative space where innovative solutions and the best ideas are born, therefore collaborative and creative environment meeting the needs of students and teachers is created. The Faculty does not limit itself to traditional lecturing but seeks for innovative teaching methods which foster critical and creative thinking skills. Interdisciplinary projects together with communities of other faculties and universities are encouraged. The Faculty's priority is social partnership and internationalization. Collaboration with private and public organisations, local communities, provide practical knowledge, abilities, and skills which match market needs. This motivates to create joint projects, to propose innovative solutions, and organise practical activities. The experience of studying and training in universities or organisations abroad is a necessary requirement to ensure the quality of studies. (www.ktu.edu and https://fssah.ktu.edu/)

III.3.22.2. Role of the organisation in the project

The representatives of the Faculty of Social Sciences, Arts and Humanties as representatives of Kaunas University of Technology and the Faculty will contribute to the development and implementation of outputs as devised by the project and will contribute in terms of the expertise and competences of the staff involved in the implementation of the project in terms of project management, dissemination and further maintenance of results implemented during the life-cycle of the project. The research areas that members of the faculty carry out interdisciplinary research activities in are related to empowering educational and learning environments, strategies and technologies, examination of digital culture with a focus on identity-relevant behaviours in the new media as well as transformations of traditional-scale thinking structures into digitality, exploring and explaining threats and challenges for sustainable, secure civil society and

providing research based solutions for strengthening civil society, region and city development and governance, Smart and sustainable public governance, Risk and security management as well as interdisciplinary research in translation, translation technology in the language industry. The organization will furthermore support WP3 (Quality Assurance) by collectively participating with other organizations as peer reviewers of project deliverable quality before these are disseminated. The organization will also support WP4 (Effectiveness Evaluation) to ensure improvements to project deliverable quality are identified and fed back to those accountable for product deliverables. This supportive role aims at leveraging the combined expertise of project participants for maximising quality and implementation effectiveness. This approach is based on the paradigm of "wisdom of the crowds" (https://en.wikipedia.org/wiki/The_Wisdom_of_Crowds). The relevant peer review process will be managed by the owners of WP3 and WP4 accordingly. The peer review process will be highly scripted and will be mandatory before official closure of the related tasks. Creating the review script is a task the owner of WP3 and WP4 respectively. The project participants accountable for the results will provide such to a peer review panel and then discuss them in an online conference. The responsibility of the peer review panel will be to use the separately prepared review script to assess the deliverables bevor the conference. The peer reviewers will also join project team events, participate in the regular monthly quality and effectiveness review meetings, and support dissemination efforts. At all times, peer reviewers will be accountable for demonstrating effort made / time spent, attending governance and review meetings, and continuously provide high quality improvement suggestions.

III.3.22.3. Operational/Technical capacity: skills and expertise of key staff involved in the project

Names of the staff members	*Summary of relevant skills and experience, including where relevant a list of recent publications related to the domain of the project.*
Assoc. prof. Dainora Maumevičienė	Assoc. prof. dr. Dainora Maumevičienė is currently a vice-dean for studies at the Faculty of Social Sciences, Arts and Humanities. She has experience in the development of both formal and informal study programmes and courses, their management, monitoring, quality assurance and accreditation. She also works as a professor of localisation, translation / interpreting, and teaching English as a foreign language. Her interest fields include ICT-integrated and blended English language teaching (with the emphasis on learning environments such as Moodle or Vista); developing learning material applying ICT technologies applicable in distance teaching and learning; localisation of software, databases and learning environments; and interpretation and translation. She has participated and coordinated in project partner countries various European (Leonardo da Vinci, Erasmus) and national (LieMSIS, LVU-Lithuanian Virtual University) projects and has made a number of presentations international conferences and seminars. As an expert in e-learning as applied to languages, the use of innovative didactics (such as design thinking in humanities, social sciences and arts), and on the basis of her wide range of international contacts in her field, she will advise all stakeholders during the project development and implementation in the area project management, dissemination, intellectual output development and other tasks as required during the project implementation and decided by the Project Steering Committee. Being a manager of the project team and KTU the assoc. prof. will compose the team of highly-competent researchers to carry out project-based activities.

III.3.23. Partner number – P23 – Vilnius University

Organisation name	**Country**
Vilnius University	**Lithuania**

III.3.23.1. Aims and activities of the organisation

Vilnius University, one of the oldest and most famous establishments of higher education in Eastern and Central Europe, was founded in 1579. Functioning for a long time as the only school of higher learning in Lithuania, it was a preserver of cultural and scientific traditions, and has played a significant part in the cultural life not only of Lithuania, but the neighbouring countries as well. During more than four centuries of its existence, the University of Vilnius has seen periods of growth and decline, revival, and closure. The University is a unique witness to the history of the Lithuanian state.Vilnius University consists of 23 faculties Faculties, Institutes, Centres & Other Divisions. Vilnius

University has a base of 2889 academic staff (teaching staff - 2182; professors - 305; associate professors - 499, ect.), and 707 research staff. The number of students is 20806. Kaunas faculty is the only faculty of Vilnius University in a different city; it was established in 1964 as an alternative in Humanities to the in those days popular technical institutions of higher education. The Faculty was born out of the idea that it would only offer general, fundamental sciences in the field of Humanities, while the speciality studies would be continued on the extramural level. In 1989, the Faculty launched full-time studies and became the Vilnius University Kaunas Faculty of Humanities. In 2017, the name was changed to Kaunas Faculty. Vilnius University Kaunas Faculty unites two institutes: Institute of Social Sciences and Applied Informatics and Institute of Language, Literature and Translation Studies. Currently, the Faculty has a base of 770 students, 599 of whom are the BA level students. The seven departments of the Faculty provide 84 workplaces for lecturers among whom are: 22 professors, 31 associate professors, 31 lectors. The Faculty has 3 scientists and 40 PhD students. The material base that meets the demands of the study and science process is constantly being updated: currently, the Faculty consists of 22 classrooms, 20 out of which have multimedia equipment, 4 computer classrooms, 2 terminal computer classrooms, video conference studio and a modern audio-visual translation lab (AVL). Website: https://www.vu.lt/

III.3.23.2. Role of the organisation in the project

The organization primarily supports WP6 and within that the development of the play in a day "The Innovation Journey".

The organization will furthermore support WP3 (Quality Assurance) by collectively participating with other organizations as peer reviewers of project deliverable quality before these are disseminated. The organization will also support WP4 (Effectiveness Evaluation) to ensure improvements to project deliverable quality are identified and fed back to those accountable for product deliverables. This supportive role aims at leveraging the combined expertise of project participants for maximising quality and implementation effectiveness. This approach is based on the paradigm of "wisdom of the crowds" (https://en.wikipedia.org/wiki/The_Wisdom_of_Crowds). The relevant peer review process will be managed by the owners of WP3 and WP4 accordingly. The peer review process will be highly scripted and will be mandatory before official closure of the related tasks. Creating the review script is a task the owner of WP3 and WP4 respectively. The project participants accountable for the results will provide such to a peer review panel and then discuss them in an online conference. The responsibility of the peer review panel will be to use the separately prepared review script to assess the deliverables bevor the conference. The peer reviewers will also join project team events, participate in the regular monthly quality and effectiveness review meetings, and support dissemination efforts. At all times, peer reviewers will be accountable for demonstrating effort made / time spent, attending governance and review meetings, and continuously provide high quality improvement suggestions.

III.3.23.3. Operational/Technical capacity: skills and expertise of key staff involved in the project

Names of the staff members	*Summary of relevant skills and experience, including where relevant a list of recent publications related to the domain of the project.*
Raimonda Agne Medeisiene	Lectures and seminars on Business Ethics, Public Relations and Responsible Leadership. Experienced in teaching / workshop's leading abroad. Expert of Applied Drama Methods, Creative director of Forum theatre "4 ROOMS", project manager. The strengths are artistic solutions, innovativeness and creativity. The most recent coordinated international project : 2014 -2016 Project coordinator of the research project New Strategies for Working life Collaboration (Project No. NPHZ-2014/10017) financed by Nordplus Horizontal. Most recent publications related to the domain of the project: • Medeišienė, R.A., Lopez Rodriguez, J., Pučėtaitė, R. (2019). Raising moral awareness of intercultural students' audience using applied drama methods. In H. Lehtimaki, A. K. Dey (ed). Ethics and Responsibility in Human Resources, Leadership, and Startup Business. (pp.98-113)). New Delhi, London, Oxford,New York, Sydney: Bloomsbury • Medeišienė, R.A., Pučėtaitė, R. (2019). Developing middle level management moral competence by Applied Drama Methods. Presentation at the 2019 Annual EBEN Research Conference, Roskilde University, Denmark, http://www.eben-net.org/content/eben-research-conference-2019-roskilde-denmark-26-28-september

Names of the staff members	*Summary of relevant skills and experience, including where relevant a list of recent publications related to the domain of the project.*
	• Lämsä, A-M., Pučėtaitė R., Kujala J., Medeišienė, R.A., Riivari, E., Bulatova, J., Kooskora, M.,Brinkmann, J., Heikkinen, A. Mixed Learning Approach to Teaching Ethics inLeadership and Management:A Case Course In A Multicultural Group. ICMC, Greater Noida, India, December 3–4, 2015
Indre Sciukauske	PhD student and teaching assistant at the Institute of Social Sciences and Applied Informatics at Kaunas Faculty, Vilnius University, Lithuania. She works on her doctoral dissertation, which investigates employer brand impact on services brand. Her research interest areas are brand management, services management and marketing, employer brand conceptualization as well as issues in human resource management.

III.3.24. Partner number – P24 – Entovation International Ltd.

Organisation name	Country
Entovation International Ltd.	**USA**

III.3.24.1. Aims and activities of the organisation

Since 1987 our purpose is to leverage the competencies of one another in the spirit of knowledge and innovation to provide innovative consulting support to enterprises, governments, cities and nations to transform and redesign the way we think and where we live. We are results oriented and want you to be successful. We Identify new markets that are being underserved, targeting those instead to create an innovative product for a new customer base, enliven macro, meso and micro economies. We create processes and programs that make it easy for new ideas to be heard and adopted and channels for better communication and collaboration around those ideas. We construct a plan and strategy or roadmap that realigns goals around innovation for implementation and achievement of those goals and provide follow-up support for sustainment. Key to success of this effort will include assessment of innovation diffusion change management strategies for governments and organizations and identifying barriers and potential solutions to innovation diffusion policies and regulations in government and companies. Website: http://entovation.com /

III.3.24.2. Role of the organisation <u>in the project</u>

The organization primarily supports WP12 in conducting a global benchmarking study in order to ensure the global competitive advantage of the project results.

The organization will furthermore support WP3 (Quality Assurance) by collectively participating with other organizations as peer reviewers of project deliverable quality before these are disseminated. The organization will also support WP4 (Effectiveness Evaluation) to ensure improvements to project deliverable quality are identified and fed back to those accountable for product deliverables. This supportive role aims at leveraging the combined expertise of project participants for maximising quality and implementation effectiveness. This approach is based on the paradigm of "wisdom of the crowds" (https://en.wikipedia.org/wiki/The_Wisdom_of_Crowds). The relevant peer review process will be managed by the owners of WP3 and WP4 accordingly. The peer review process will be highly scripted and will be mandatory before official closure of the related tasks. Creating the review script is a task the owner of WP3 and WP4 respectively. The project participants accountable for the results will provide such to a peer review panel and then discuss them in an online conference. The responsibility of the peer review panel will be to use the separately prepared review script to assess the deliverables bevor the conference. The peer reviewers will also join project team events, participate in the regular monthly quality and effectiveness review meetings, and support dissemination efforts. At all times, peer reviewers will be accountable for demonstrating effort made / time spent, attending governance and review meetings, and continuously provide high quality improvement suggestions.

III.3.24.3. Operational/Technical capacity: skills and expertise of key staff involved in the project

Names of the staff members	*Summary of relevant skills and experience, including where relevant a list of recent publications related to the domain of the project.*
Lynne Schneider	Ms. Schneider is CEO of Entovation International and has over 30 years of experience in the defense industry and international economic development initiatives. She has a successful track record providing innovative strategy and policy solutions to senior officials/military on a global scale in the Middle East, Europe and NATO. Ms. Schneider has extensive knowledge of large and small organization policy/processes, principals fostering change and designing and directing large-scale innovative projects for the Federal Government and private sector applying knowledge of global innovation and knowledge cities, crisis response, economic development and micro-business initiatives. Acts as a Senior Advisor to the Chief Management Officer at DoD covering all aspects of transformation and reform for the business operations of the Department. Maintains the Entovation 100 Global Knowledge Leaders; which includes several global thought leaders and practitioners in the field who play a role in shaping the new knowledge-based econom. Expertise in stability operations with a concentration on Theater Security Cooperation, stabilization strategies for economic and national security, reconstruction, emergency response. Recent success includes revitalization of Tblisi Republic of Georgia, economic development planning and business incubator innovation initiatives in Poland. Entovation books include Innovation Superhighway, Knowledge Economics, Beyond Business Process Re-engineering. Most recent publications related to the domain of the project: • A Framework for Accelerating Innovation through Innovation Webs with co-authors Oliver Schwabe, Nuno Marques de Almeida and Ana Filipa Salvado.
Chin Hoon Lau	Chin Hoon is a pioneer of international virtual knowledge network, open innovation and online collaborative learning of bioinformatics. Track record: a member of Entovation 100 Global Knowledge Leaders, founder of Internet Biologists (completed a 10-year multiple innovation cycles including ideation, virtual teaming, leadership renewal, delivery of courses, and knowledge transfer through several publications). Expert in policy analysis and development. Track record: 14 years of legislative service, governmental policy and political issue analysis, academically enhanced by 4 years of related postgraduate-level training. Research and industrial experience in molecular biotechnology, e-learning, dotcom start-up, and virtual community. Combined 20 years of social and political innovations at NGO, grassroots and constituency level, with the building of micro knowledge entities and increasing knowledge content as the core strategies. Experienced in the management of issues, traps and advantages in the cross and mixed cultural communication within Asians and between the typical East-West, as well as cross socio-economical communication. Most recent publications related to the domain of the project: • Lau, C.H., Atherton, D., Gore-Langton, R.E., Kondu, P., Leifer, Z. (2005) Internet Collaboration. In: The Internet for Molecular Biologists. A Practical Approach. (Sansom, C.E. and Horton, R.M., eds). Oxford University Press. • Lau, C.H. (2006) In Search of Permanency: Internet Biologists and Continuity in Virtual Knowledge Network. In: Knowledge Economics: Emerging Principles, Practices and Policies. (Amidon, D.M., Formica, P., Mercier-Laurent, E. eds). Tartu University Press. • Lau, C.H. (2009) The Future of Innovation is Enabling Hope at the Frontiers of Systems, Values and Politics. In: The Future of Innovation (Bettina von Stamm and Ana Trifilova, eds). Gower.
Joel Alleyne	Joel is active academically at the Faculty of Information and Knowledge Media Design Institute (University of Toronto) and has taught at the Faculty of Information and Media Studies (University of Western Ontario). He is a member of the Entovation 100 Global Knowledge Leaders; which includes several global thought leaders and practitioners in the field who play a role in shaping the new knowledge-based economy. Joel is also a faculty member with the Kaieteur Institute for Knowledge Management. Joel has held senior management roles (Chief Information Officer, Chief Knowledge Officer) and is been involved in several projects involving mobile health (mHealth), eHealth, health networking, electronic medical records, knowledge management, strategic planning, and

Names of the staff members	*Summary of relevant skills and experience, including where relevant a list of recent publications related to the domain of the project.*
	inter-professional care (IPC). He has also done research in these areas and led industry working groups involving both health providers and vendors. sciences industry. Current research involves information and knowledge management.

III.3.25. Partner number – P25 – Rolls-Royce Deutschland Ltd & Co KG

Organisation name	Country
Rolls-Royce Deutschland Ltd & Co KG	**Germany**

III.3.25.1. Aims and activities of the organisation

Rolls-Royce Deutschland Ltd & Co KG is a fully owned subsidiary of Rolls-Royce plc. Rolls-Royce is the world's leading engine supplier for business aviation, powering more than 3,200 aircraft in service today. Rolls-Royce pioneers cutting-edge technologies that deliver clean, safe and competitive solutions to meet our planet's vital power needs. Rolls-Royce has customers in more than 150 countries, comprising more than 400 airlines and leasing customers, 160 armed forces, 70 navies, and more than 5,000 power and nuclear customers. Annual underlying revenue was £15 billion in 2018, around half of which came from the provision of aftermarket services. In 2018, Rolls-Royce invested £1.4 billion on research and development. Rolls-Royce also supports a global network of 29 University Technology Centres, which position Rolls-Royce engineers at the forefront of scientific research.
The Group has a strong commitment to apprentice and graduate recruitment and to further developing employee skills.
Website: https://www.rolls-royce.com/

III.3.25.2. Role of the organisation <u>in the project</u>

This is a business participant in the project and primarily responsible for providing a case study at the outset of the project, verifying the robustness of the simulation tool developed, verifying the robustness of the design principles created, validating the overall simulation model in practice and piloting the career framework as it develops. The participant will support a single two hour virtual workshop for WP9 and separate minimum one day face-to-face workshops each for WP8, WP10, WP11, WP13 and WP14 which will either be hosted at their participating regional institute of higher education or on their premises with a minimum of two participants. Furthermore, support for WP6 is required in the form of creating / piloting a structured ideation case study and by continuously acting as pilot users for learning solutions developed. The effort involved in supporting WP6 will be integrated with face-to-face workshops and supported by self-paced and web-based micro-learning solutions. As a business participant they are furthermore invited to annual team events at their own costs and voluntary participation in WP3, WP4 and WP5. Business participants are not required to contribute any intellectual property to the project, yet if so it will be formally managed via WP3.

The organization will furthermore support WP3 (Quality Assurance) by collectively participating with other organizations as peer reviewers of project deliverable quality before these are disseminated. The organization will also support WP4 (Effectiveness Evaluation) to ensure improvements to project deliverable quality are identified and fed back to those accountable for product deliverables. This supportive role aims at leveraging the combined expertise of project participants for maximising quality and implementation effectiveness. This approach is based on the paradigm of "wisdom of the crowds" (https://en.wikipedia.org/wiki/The_Wisdom_of_Crowds). The relevant peer review process will be managed by the owners of WP3 and WP4 accordingly. The peer review process will be highly scripted and will be mandatory before official closure of the related tasks. Creating the review script is a task the owner of WP3 and WP4 respectively. The project participants accountable for the results will provide such to a peer review panel and then discuss them in an online conference. The responsibility of the peer review panel will be to use the separately prepared review script to assess the deliverables bevor the conference. The peer reviewers will also join project team events, participate in the regular monthly quality and effectiveness review meetings, and support dissemination efforts. At all times, peer reviewers will be accountable for demonstrating effort made / time spent, attending governance and review meetings, and continuously provide high quality improvement suggestions.

III.3.25.3. Operational/Technical capacity: skills and expertise of key staff involved in the project

Names of the staff members	*Summary of relevant skills and experience, including where relevant a list of recent publications related to the domain of the project.*
Andreas Hoessler	Experienced Project / Programme Manager in complex environments of R&D, IT, Operations and Engine Programs, who holds a degree in Mechanical Engineering (Dipl. Ing.) and Programme Management (MSc). Pragmatic working style, multi interested, open minded, continually learning and improving, relishes new challenges and prefers transformational approaches. Remain calm under high pressure. Reflection being applied to daily work. Godfather in the foundation "Haus der kleinen Forscher" ("Little Scientists' House"). Key Note Speaker at the University of Manchester in Project Management. Key expertise includes: • Complex Project Management in R&D (Research & Development), IT, Operations and Engine Programs. • Project Portfolio Management • Engine Testing, Validation and Engine Development • Product Lifecycle Management from cradle to grave (theory and applied practice) • Manufacturing processes and relevant improvements (e.g. Data Driven Manufacturing, Process Excellence) • Change, Risk (with special interest) and Stakeholder Management • IT Systems knowledge in Manufacturing and underlying Business Processes. • Enterprise Asset and Service Management • Leadership skills - enthusing diverse, multinational teams to successfully deliver on complex projects. • Easy communication and networking on all levels within and outside the company.

III.3.26. Partner number – P26 – Volvo Lastvagnar AB

Organisation name	**Country**
Volvo Lastvagnar AB	**Sweden**

III.3.26.1. Aims and activities of the organisation

Volvo Lastvagnar AB is a part of Volvo Group, which have around 110 000 employees. We are one of the world's leading manufacturers of trucks, buses, construction equipment and marine and industrial engines. We also provide complete solutions for financing and service. Main task of our affiliation is the powertrain component production (PWT), our group is the global function of PWT which take care of all the Research and Advance Engineering activities for all our production sites as well as current production processes in the daily production. I.e. we take care of production technologies from research to introduction to mass production. Website: https://www.volvotrucks.se/

III.3.26.2. Role of the organisation <u>in the project</u>

This is a business participant in the project and primarily responsible for providing a case study at the outset of the project, verifying the robustness of the simulation tool developed, verifying the robustness of the design principles created, validating the overall simulation model in practice and piloting the career framework as it develops. The participant will support a single two hour virtual workshop for WP9 and separate minimum one day face-to-face workshops each for WP8, WP10, WP11, WP13 and WP14 which will either be hosted at their participating regional institute of higher education or on their premises with a minimum of two participants. Furthermore, support for WP6 is required in the form of creating / piloting a structured ideation case study and by continuously acting as pilot users for learning solutions developed. The effort involved in supporting WP6 will be integrated with face-to-face workshops and supported by self-paced and web-based micro-learning solutions. As a business participant they are furthermore invited to annual team events at their own costs and voluntary participation in WP3, WP4 and WP5. Business participants are not required to contribute any intellectual property to the project, yet if so it will be formally managed via WP3.

The organization will furthermore support WP3 (Quality Assurance) by collectively participating with other organizations as peer reviewers of project deliverable quality before these are disseminated. The organization will also support WP4 (Effectiveness Evaluation) to ensure improvements to project deliverable quality are identified and fed back to those accountable for product deliverables. This supportive role aims at leveraging the combined expertise of project participants for maximising quality and implementation effectiveness. This approach is based on the paradigm of "wisdom of the crowds" (https://en.wikipedia.org/wiki/The_Wisdom_of_Crowds). The relevant peer review process will be managed by the owners of WP3 and WP4 accordingly. The peer review process will be highly scripted and will be mandatory before official closure of the related tasks. Creating the review script is a task the owner of WP3 and WP4 respectively. The project participants accountable for the results will provide such to a peer review panel and then discuss them in an online conference. The responsibility of the peer review panel will be to use the separately prepared review script to assess the deliverables bevor the conference. The peer reviewers will also join project team events, participate in the regular monthly quality and effectiveness review meetings, and support dissemination efforts. At all times, peer reviewers will be accountable for demonstrating effort made / time spent, attending governance and review meetings, and continuously provide high quality improvement suggestions.

III.3.26.3. Operational/Technical capacity: Skills and expertise of key staff involved in the project

Names of the staff members	*Summary of relevant skills and experience, including where relevant a list of recent publications related to the domain of the project.*
Robert Wester	Robert Wester, Manufacturing Technology Manager. Started at Volvo -89 in the local organization in Skövde / Sweden. Have since 2008 been globally responsible for both development and current Verification processes for Powertrain (Diesel engine and transmission). From 2018 I'm global responsible for Manual Assembly within Powertrain. Since 2014: Business Process Developer of the Manufacturing Technology Roadmap Process and Business Process Developer of the Master Process (current WoW for all Factories in Powertrain). Some research & Advanced Engineering projects from last 3 years: • Find concepts to minimize EOL, instead use IPV • Future Assembly of Electromobility • Re-configurable production • Vision system to ensure correct Assembly • Material to Man concepts • Concepts to improve ergonomic situations
Danfang Chen	Danfang Chen, Manufacturing Technology Manager, Associate Professor in Sustainable Manufacturing Technology. Number of publications: Journal 6, Conference 9. Involvement in government founded research projects, a few selection from last 5 years: • Test bed for the future process fluids in sustainable production • Industrial water • Transitioning to sustainable production – application on automotive powertrain manufacturing processes (SUSTAIN-CRYO) • Innovativ powder based component technologies • Fundamentals of Barkhausen noise and magnetic field modelling • Development of localized electrochemical deposition for re-manufacturing • Non-destructive characterization concepts for production • Capability of Machining Systems and Performance Improvement Technologies

III.3.27. Partner number – P27 – Aristoncavi SPA

Organisation name	Country
Aristoncavi SPA	**Italy**

III.3.27.1. Aims and activities of the organisation

Aristoncavi is one of the most important manufacturers of rubber insulated low voltage and medium voltage cables. Aristoncavi has grown up to the present 35.000 sqm, due to a recent expansion and reallocation of the manufacturing sites and warehouses, shared between the two production units dedicated to the manufacture of conductors and electric cables, for different applications. Aristoncavi has moreover achieved leading positions in some market segments for the "special application" cables. In the last years the company has especially invested in the technological growth, by strengthening the technical department with a particular care for the Research & Development of cables dedicated to the industry and tertiary sectors. Aristoncavi has its own innovative specific production and laboratory equipment, capable of engineering and manufacturing "high-tech" cables for different applications. Website: https://www.aristoncavi.com/

III.3.27.2. Role of the organisation in the project

This is a business participant in the project and primarily responsible for providing a case study at the outset of the project, verifying the robustness of the simulation tool developed, verifying the robustness of the design principles created, validating the overall simulation model in practice and piloting the career framework as it develops. The participant will support a single two hour virtual workshop for WP9 and separate minimum one day face-to-face workshops each for WP8, WP10, WP11, WP13 and WP14 which will either be hosted at their participating regional institute of higher education or on their premises with a minimum of two participants. Furthermore, support for WP6 is required in the form of creating / piloting a structured ideation case study and by continuously acting as pilot users for learning solutions developed. The effort involved in supporting WP6 will be integrated with face-to-face workshops and supported by self-paced and web-based micro-learning solutions. As a business participant they are furthermore invited to annual team events at their own costs and voluntary participation in WP3, WP4 and WP5. Business participants are not required to contribute any intellectual property to the project, yet if so it will be formally managed via WP3.

The organization will furthermore support WP3 (Quality Assurance) by collectively participating with other organizations as peer reviewers of project deliverable quality before these are disseminated. The organization will also support WP4 (Effectiveness Evaluation) to ensure improvements to project deliverable quality are identified and fed back to those accountable for product deliverables. This supportive role aims at leveraging the combined expertise of project participants for maximising quality and implementation effectiveness. This approach is based on the paradigm of "wisdom of the crowds" (https://en.wikipedia.org/wiki/The_Wisdom_of_Crowds). The relevant peer review process will be managed by the owners of WP3 and WP4 accordingly. The peer review process will be highly scripted and will be mandatory before official closure of the related tasks. Creating the review script is a task the owner of WP3 and WP4 respectively. The project participants accountable for the results will provide such to a peer review panel and then discuss them in an online conference. The responsibility of the peer review panel will be to use the separately prepared review script to assess the deliverables bevor the conference. The peer reviewers will also join project team events, participate in the regular monthly quality and effectiveness review meetings, and support dissemination efforts. At all times, peer reviewers will be accountable for demonstrating effort made / time spent, attending governance and review meetings, and continuously provide high quality improvement suggestions.

III.3.27.3. Operational/Technical capacity: Skills and expertise of key staff involved in the project

Names of the staff members	*Summary of relevant skills and experience, including where relevant a list of recent publications related to the domain of the project.*
Leopoldo Destro	Leopolodo Destro is the chief executive of Aristoncavi.

III.3.28. Partner number – P28 – Baladi Ltd.

Organisation name	Country
Baladi Ltd.	**Israel**

III.3.28.1. Aims and activities of the organisation

Baladi is one of the largest and leading food companies in Israel. The company is based in the Beer Tuvia´s Industrial Zone, near Kiryat Malachi, and includes the logistics centre and the company offices. The company´s production activities are carried out at a plant in the Shahak industrial zone in Emek Izrael. Baladi deals with the import, manufacturing and marketing of various high quality good products marketed nation-wide from Kiryat Shmona to Eilat. Website: http://www.baladi.co.il/?lang=eng

III.3.28.2. Role of the organisation in the project

This is a business participant in the project and primarily responsible for providing a case study at the outset of the project, verifying the robustness of the simulation tool developed, verifying the robustness of the design principles created, validating the overall simulation model in practice and piloting the career framework as it develops. The participant will support a single two hour virtual workshop for WP9 and separate minimum one day face-to-face workshops each for WP8, WP10, WP11, WP13 and WP14 which will either be hosted at their participating regional institute of higher education or on their premises with a minimum of two participants. Furthermore, support for WP6 is required in the form of creating / piloting a structured ideation case study and by continuously acting as pilot users for learning solutions developed. The effort involved in supporting WP6 will be integrated with face-to-face workshops and supported by self-paced and web-based micro-learning solutions. As a business participant they are furthermore invited to annual team events at their own costs and voluntary participation in WP3, WP4 and WP5. Business participants are not required to contribute any intellectual property to the project, yet if so it will be formally managed via WP3.

The organization will furthermore support WP3 (Quality Assurance) by collectively participating with other organizations as peer reviewers of project deliverable quality before these are disseminated. The organization will also support WP4 (Effectiveness Evaluation) to ensure improvements to project deliverable quality are identified and fed back to those accountable for product deliverables. This supportive role aims at leveraging the combined expertise of project participants for maximising quality and implementation effectiveness. This approach is based on the paradigm of "wisdom of the crowds" (https://en.wikipedia.org/wiki/The_Wisdom_of_Crowds). The relevant peer review process will be managed by the owners of WP3 and WP4 accordingly. The peer review process will be highly scripted and will be mandatory before official closure of the related tasks. Creating the review script is a task the owner of WP3 and WP4 respectively. The project participants accountable for the results will provide such to a peer review panel and then discuss them in an online conference. The responsibility of the peer review panel will be to use the separately prepared review script to assess the deliverables bevor the conference. The peer reviewers will also join project team events, participate in the regular monthly quality and effectiveness review meetings, and support dissemination efforts. At all times, peer reviewers will be accountable for demonstrating effort made / time spent, attending governance and review meetings, and continuously provide high quality improvement suggestions.

III.3.28.3. Operational/Technical capacity: Skills and expertise of key staff involved in the project

Names of the staff members	*Summary of relevant skills and experience, including where relevant a list of recent publications related to the domain of the project.*
Erez Dahabani	Erez Dahabani is the owner and CEO of Baladi. He is the 3rd generation in the Dahabani family leading this 104 years old family business. He assumed responsibility of the company at age 16, when his fathered identified his talent for business, and trusted him to take over the responsibility to lead the company into the future. He is a leader and entrepreneur and under his leadership Baladi has grown steadily gaining trust and respect in Israel and abroad. His secret of success is fast innovation through experimentation. He identifies opportunities and moves fast to exploit them. The company today is one of the leaders in the food market in Israel. Baladi is innovating both in operations and in

Names of the staff members	*Summary of relevant skills and experience, including where relevant a list of recent publications related to the domain of the project.*
	marketing. The new logistics center will soon open - fully automated - and new convenience products are now leading the market and growing the turnover of Baladi in an amazing speed. Erez is always eager to learn from others and to share his knowledge with others and he will be a great team member in our knowledge alliance focused on accelerating innovation.

III.4. Cooperation arrangements across the partnership

The overall project management structure describes the intended ways of working and decision making among the members of the consortium. This includes reporting, monitoring and general communications. The grant agreement will define the specific responsibilities of the consortium members towards the funder. The consortium agreement will be the formalization of arrangements and responsibilities for decision-making, conflict resolution, reporting, monitoring, communication and other relevant issues. The grant agreement will cover legal, administrative and financial provisions that all consortium members agree to abide by. The consortium agreement will operationalize the grant agreement.

In respect to formal conflict resolution the steering committee will be responsible for hearing all parties and facilitating a consensus solution best suited for the interests of the project. In the event of a consensus solution not being achievable a qualified majority decision may be followed after consultation with the funding organization. If a qualified majority decision cannot be achieved then a simple majority decision may be followed after consultation with the funding organization. If a simple majority decision cannot be reached then the lead proposer may decide after consultation with the funding organization. No partner has veto rights and partners may be suspended or removed from the project for contractual breaches as defined by the grant and consortium agreements or determined by a qualified majority of the consortium members. Suspension or removal will then trigger relevant financial recovery efforts.

III.5. Partner Country participation

Partner countries involved are CH, IN, IL and USA. The partner from CH is deeply experienced in community building which is a core capability for project success currently not provided by Programme Country members. The partner from IN has deep experience in building user friendly software solutions for the open source market. The partner from IL has deep knowledge of how the innovation system(s) work in a benchmark EU Partner Country and thus contributes from a unique regional perspective. The partner from the USA enables the benchmarking of project efforts against global regions in order to ensure that the project approach truly enables competitive advantage in a global market space.

PART IV. Impact, dissemination, exploitation, and sustainability

IV.1. Target groups

IV.1.1 Please explain which target groups (e.g. participating organisations as well as other stakeholders such as higher education institutions, companies/SMEs/businesses, students, professionals, the wider public) will benefit from the project results/outcomes. Indicate how the project outputs will be used by these target groups and will lead to expected outcomes and change. (Recommended limit 3000 characters)

The key target groups of the project consist of higher education institutions, high value manufacturing organizations and their intermediaries.

Higher Education Institutions will benefit from the project by:

- establishing themselves as the pioneers of accelerating innovation systems in high value manufacturing among national universities, which will help recruiting more and better researchers and students in this emerging field.
- co-working with high value manufacturing organizations to meet real needs of the sector and offer innovative and more attractive educational programs.
- expanding the research field in the acceleration of innovation systems through more publications and more research leading to greater reputation.
- establishing a new educational programme, adapted to the actual challenges and needs detected by and co-created with high value manufacturers themselves which ease its success and sustainability.
- gaining greater experience with EU funded research projects.

Manufacturing organizations and their intermediaries will benefit from the project by:

- gaining a new learning programme and methodologies to improve staff and ecosystem member development.
- creating a better understanding and connecting with their existing and potential markets.
- learning more about European challenges, common points and opportunities in relation to high value manufacturing.
- implementing and using the research findings to disruptively accelerate their innovations from ideation to market saturation.

The project also places a special focus on young professionals and early career researchers in both target groups in addition to emphasizing the importance of enabling such from COST target inclusiveness countries to assume accountabilities and responsibilities within the project. Importance is also given to creating a wide diversity of participants and creating collaboration opportunities across multiple disciplines including the integration of the arts into what is traditionally considered to be a STEM driven context.

The key output of the project is a career framework on vocational, higher education and continuous professional development level made explicit through an appropriate curriculum. Higher education institutions will provide the curriculum as an ECTS accredited offering to manufacturing organizations and their intermediaries following Open Education principles. By offering the curriculum higher education institutions contribute to enabling a paradigm shift in educational thinking that is necessary to help create sustainable competitive advantage in Europe in the high value manufacturing space. By consuming the curriculum manufacturing organizations are enabled to significantly accelerate the journey of innovations from ideation to market saturation.

IV.1.2 Please describe how the target groups will be reached and involved during the project lifetime and how the project will be beneficial for these target groups at local, regional, national and or European level. What is the change your project will make?

Representatives of all target groups are involved as partners of the project and will thus be in direct contact with such at all times. They will co-create and co-experience the curriculum created for vocational, higher education and continuous professional development through the work packages of the project. Diffusion of the curriculum to further members of the target groups will be achieved through the following measures:

- Open Regional Events

- Bi-annual, face to face and conducted as the third day of regional workshops with participating manufacturing businesses.
- Participation is solicited via project participants in the region and their local networks.
- The aim is a maximum of 20 participants per event and the event will be hosted by a regional institute of higher education.

- Online Community of Collaboration
  - A non-commercial open, adaptive and tribal professionally moderated online community as the basis for creating, maintaining and growing a community of collaboration.
  - Supported by a dedicated work package.
  - Focused on evolving current innovation diffusion systems towards the project aim with clear leadership and actions.
  - Acts as a resource pool for community activities and activities of community members.
  - Involves all project members and their extended networks, including (non-) governmental organizations at local, regional, national and EU level, and grant makers at all levels.
  - Brings together members around specific grant proposals.
  - Collaboration behaviour and patterns are continuously analysed and evaluation as part of the dedicated work package in order to generate interventions effective for enabling significant growth.

- Annual Web-Conferences (Optional)
  - Annual online events where conference contributions are presented as videos with ensuing question and answer sessions live streamed from a studio at the hosting institution. An industry panel session will be held at the end of the event. The format followed can be seen at http://www.cirpe2019.com/ and was previously organized and hosted by a higher education member of the project.
  - Pending further definition the theme in year 1 will be on simulations of living systems in manufacturing organizations, the theme in year 2 will be on game changers in innovation diffusion and the theme in year 3 will be on monitoring the diffusion of innovations from ideation to market saturation.
  - Conference contributions will be solicited globally via the project communications channels, the collaboration platform and all networks which project members are affiliated with.
  - Conference contributions will consist of papers with a maximum of length of 8 pages which will be peer reviewed and published as conference proceedings.
  - The aim will be three day events in at least two parallel streams with at least 20 contributions per stream daily.
  - These web-conferences are considered as optional pending final budget and resourcing decisions. While of great potential value to the dissemination and exploitation efforts the involved effort is not insignificant and resourcing will need to be explored separately at project launch. P9 has substantial relevant experience and would collaborate intensively with P5 if this activity is pursued.

IV.1.3 Please describe how the target groups will be reached ***after the project is finished****.*

Any activities after project completion must either be institutionalized and successful revenue generators as such or funded via alternate sources. Reaching target groups after the project is finished is thus based on institutionalization of the curriculum at the institutes of higher education and Chambers of Commerce (for vocational offerings), and furthermore completing the activities aimed at sustaining the partnership beyond the project lifetime. While the implementation of the latter is not a result of the project, their implementation will be progressed as business as usual activities of the project partners active in higher education. One further aspiration by the project consortium is the submission of a grant proposal for an Erasmus Mundus Joint Degree Program Certification of the developed and implemented Master level certificates. Another further aspiration by the project consortium is funding of one or more tenured professorships by high value manufacturing organizations at participating institutions of higher education.

The project consortium anticipates that the free and open applied learning and collaboration community will only be sustainable after project end without funding if it continues to focus on the co-creation of grant and / or funding proposals, plus generate industry engagements at normal commercial market rates. The project consortium furthermore anticipates that such efforts will expand to collaborating with other global regions such as the USA via the National Science Foundation and Asia Pacific via the Asia Pacific Development Bank. The project consortium furthermore anticipates that the project methodology will be re-purposed for other relevant industries (such as accelerating the development of sustainable smart cities) or formalized ecosystems (such as mobility, climate and energy). Finally the project consortium anticipates re-purposing of the project approach to reduce and / or prevent innovation in non-regulated industries such as goods smuggling (i.e. drugs and weapons), human trafficking (i.e. slavery or prostitution).

IV.2. Sustainability and impact

IV.2.1 How will the activities and the partnership be sustained beyond the project lifetime? Please explain which results of your project will be maintained after EU funding, and how you intend to maintain them, including the necessary financial and human resources. (Recommended limit 3000 characters)

After the end of the project the following activities intend to be pursued in order to ensure continuation and further diffusion of the curriculum under the assumption that (a) the vocational version of the curriculum has been established as an offering by (regional) Chambers of Commerce (b) the higher educational version of the curriculum has been established as a set of Master level certification offerings joint-accredited by participating institutions of higher education, and (c) the continuous professional development version of the curriculum has been established as an offering in the participating manufacturing companies. The relevant details are included in the project as deliverables.

- Creation and implementation of an intellectual property agreement supporting the use of project deliverables through the network during and after the project.
- Formalization of the project as a non-profit organization with a membership fee model. This recurring revenue source will enable ongoing refinement of the curriculum at all levels. The success of this effort will depend upon (a) a sufficient number of founding members as legally required by the country the organization will be founded in (b) sufficient number of members paying annual fees that are able to support operational costs.
- Implementation of an accreditation and licencing model for the curriculum which is managed by the non-profit organization to be created.
- Implementation of software as a service licencing model for the simulation which is managed by the non-profit organization to be created.
- Implementation of the annual web conference as a publication and participation fee based model which is managed by the non-profit organization to be created.
- Implementation of a financial model for the online Community of Collaboration which will support operational costs which is managed by the non-profit organization to be created.

Inspiration for the nature of the organization existing after project end is drawn from existing comparable organizations such as ENACTUS (https://enactus.org/) and KTN (https://ktn-uk.co.uk/).

The activities and the partnerships will thus be sustained beyond the project lifetime through the community that has been built throughout the project, and perhaps through individual business relationships between partners.

IV.2.2 Please indicate what is the expected short term and long term impact on the target groups (including participating institutions and stakeholders); what is the desired impact of the project at local, regional, national, European and/or international level? What activities do you envisage to ensure that the expected and desired impact is achieved? (Recommended limit 3000 characters)

The project will evaluate and forecast labour market needs related to accelerating the diffusion of innovations from ideation to market saturation in high value manufacturing and design an appropriate career framework with curriculum in order to bridge the gap between current offerings by higher education and the vocational, higher education and continuous professional development needs of businesses. The specific aspirations of the project are:

- Innovation: To develop an innovative multidisciplinary curriculum mixing informal and formal learning methodologies and digital resources to introduce theory and practice. A critical and reflective learning approach in the higher educational environment will be strongly linked to the real problems high value manufacturing organisations face.
- Impact: To bring together the worlds of higher education and business at all levels to share knowledge, practices and to test processes to find innovative ways to tackle the problem of the distance between the two worlds. This will include advancing the theory and practice of innovation diffusion through high quality research and learning, and enables both target groups practitioners and students to develop excellent transversal leadership skills, reflective practice, entrepreneurial mind-sets, equipping them to adapt to continuous change in the labour market.
- Sustainability: To involve policy-makers and relevant stakeholders together with academics and practitioners to start and formalize not only an EU network focused on accelerating the diffusion of innovation from ideation to market saturation in high value manufacturing. These measures will furthermore promote co-operation and exchange of good practices between academics, students and practitioners at European level and create a mutually supportive network and learning community of post graduate students, practitioners and academics.

The longer term aspirations are:

- to strengthen the role of higher education in the field of innovation diffusion in high value manufacturing.
- to raise awareness among high value manufacturing organisations of the importance of integrating capabilities for accelerating the diffusion of innovation in their management strategies for future sustainability.
- to create a European community of practice based on the knowledge alliance approach.

These objectives will be pursued through the following activities leading to the deliverables. These deliverables will lead to a career framework that will provide:

- higher education researchers and students the opportunity to update their skills and knowledge in a capability of increasing importance to high value manufacturing, including the relevant entrepreneurial and soft skills.
- • higher education researchers and students to learn through applied research approaches in workshops at businesses participating in the project which will in itself represent an exercise for effective networking and will reach the largest possible number of network members.

IV.2.3 Please specify whether/how existing undertakings, schemes, projects, platforms, ventures etc. will be linked to/integrated into the project. Also demonstrate that the project outputs and results will be transferable and accessible to a broader audience.

The project will integrate with higher level EU undertakings in the manufacturing innovation space as a specialization in the high value manufacturing space. Within Horizon 2020 the initial areas of focus will be the Industrial Leadership Pillar (see https://ec.europa.eu/programmes/horizon2020/en/h2020-section/industrial-leadership) with an emphasis on supporting the objectives for "Leadership in enabling and industrial technologies (LEIT)" (see https://ec.europa.eu/programmes/horizon2020/node/11) and "Innovation in SMEs" (see https://ec.europa.eu/programmes/horizon2020/h2020-section/innovation-smes). The project will continuous scan for further programs of relevance and seek to integrate with such especially as Horizon 2020 moves to becoming Horizon Europe during the intended project duration.

In respect to “Leadership in enabling and industrial technologies (LEIT)” the emphasis will be on accelerating the creation and diffusion of key industrial competencies as well as accelerating the creation and diffusion of the new and breakthrough technologies developed.

In respect to “Innovation in SMEs” the emphasis will be on integrating the project findings and career framework with curriculum in relevant efforts such as offering coaching services under the European Innovation Council pilot's SME instrument and / or the EUREKA/Eurostars Joint Programme Initiative.

Integration with higher level EU undertakings will be accomplished through activities such as:

- Making specific recommendations to improve quality based on project learnings.
- Joining relevant working groups.
- Training participants in project tools and methodologies.
- Supporting exploitation of results by partners in projects.
- Creating new proposals.
- Joining existing proposals and projects.

Integration will be enabled through regular review of higher level EU undertaking activities, inviting their members to join the applied learning and collaboration community, and becoming a trusted member of these established communities.

IV.2.4 Describe the dissemination and promotion measures that will ensure the best project visibility, including project advocacy and pro-active public relations activities. In this context, indicate the main project website features that will ensure that the produced outputs/deliverables are accessible to end users and properly promoted. Also explain your strategy on social media.

Promotion measures to ensure the best project visibility are related to the dissemination and exploitation activities and their marketing channels. All activities will be promoted through dedicated campaign management efforts supported by a relevant tool (i.e. https://www.marketo.com/). Campaign management is the detailed planning, execution, tracking and analysis of marketing initiatives across multiple channels such as social media, telephone, print media and face to face conversations. Campaign management covers multiple phases from advertising through target marketing, lead generation and the hand-over to a sales process.

All project dissemination and exploitation activities will be accompanied by campaigns tailored to their unique nature. Starting point will always be the websites of the project (partners) and their underlying networks of contacts. Social media will then be used to target these for awareness building, solicitation to participate in events and encouragement to contribute to events, especially the annual web conferences, regional events and workshops. All activities will then be broadcast accordingly using streaming video and such stored for later review by individuals unable to attend live events. All content used will be made available via the online community of applied learning and collaboration.

The main project website will act as a portal to multiple applications providing an integrated user experience supporting the dissemination and promotion measures. Main project website features in this respect will be a news section supported by a blog the contents of which will be disseminated across key social media platforms such as LinkedIn, Facebook and Twitter. Further key website features will be connections to the applied learning and collaboration platform, the technology provisioning platform (i.e. Sourceforge), the learning platform (i.e. Moodle) and the online version of the simulation tool. Furthermore the project website (and connected solutions) will be made available via an app available in the Apple store and via Google Play.

The social media strategy is defined by a close alignment to the value creation metrics tracked by the work package accountable for monitoring the effectiveness of project dissemination and exploitation efforts. From a campaign management perspective these are typically leads generated, web referrals and conversion rates. In general the relevant metrics can be understood as referring to awareness (i.e. followers and shares), engagement (i.e. comments, likes, @mentions), conversions (i.e. website clicks and email signups) and consumer feedback (i.e. testimonials and social media sentiments). Intensive efforts will also be made for cross-linking to related projects and sites.
Special effort will also be made to encourage word of mouth advertising by project partners and their networks since this is deemed as the most effective foundation for successful campaigns.

IV.2.5 Overview of short term results and long term outcome indicator
s

Short term results	**Target groups/potential beneficiaries**	**Quantitative indicators**	**Qualitative indicators**
PARTICIPATION AND PUBLISHING in a novel field of great interest to high value manufacturing industry	Young professionals and early career researchers in COST Target Inclusiveness Countries	NUMBER OF PUBLICATIONS in high quality journals and conferences.	NUMBER OF PUBLICATION SUBMISSIONS to high quality journals and conferences.
NEW TOOLS AND PROCESSES for accelerating the diffusion of innovations	Higher Education and business enterprises in the high value manufacturing industry.	NUMBER OF ACCREDITED CERTIFICATE COURSES from the career framework and curriculum.	NUMBER OF JOINT ACCREDITION INSTITUTIONS of higher education.
GREATER VISIBILITY of institutional expertise to business through workshop driven activities.	Higher Education and business enterprises in the high value manufacturing industry.	NUMBER OF WORKSHOP participants mentioned in relevant media releases by project communications plan.	NUMBER OF MEDIA RELEASES BY PARTICIPANTS via their own communication channels.
REDUCED FINANCIAL UNCERTAINTY in early phases of innovation journey.	Business enterprises.	NUMBER OF IDEA/PRODUCT LAUNCHES referencing the ideation to market saturation journey.	NUMBER OF IDEA/PRODUCT LAUNCH REQUESTS REVIEWED as part of Innovation Diffusion Monitor efforts.

Long term outcomes	Target groups/potential beneficiaries	Quantitative indicators	Qualitative indicators
INCREASED CAPABILITY to create and manage research proposals and their projects.	Young professionals and early career researchers in COST Target Inclusiveness Countries	NUMBER OF PROPOSALS from target group individuals submitting, winning and leading research proposals in area of high value manufacturing innovation.	NUMBER OF PREVIOUS RELEVANT PROJECTS with target groups as coordinating organizations.
POLICY EXTENSION to explicitly support the the ideation to market saturation journey.	Higher Education and business enterprises in the high value manufacturing industry.	NUMBER OF EU POLICIES related to high value manufacturing mentioning the "diffusion of innovation".	NUMBER OF CASE STUDIES in high value manufacturing research related to diffusion of innovation.
LIVING SYSTEMS THINKING ESTABLISHED as the key paradigm in the innovation journey space.	Higher Education and business enterprises in the high value manufacturing industry.	NUMBER OF PUBLICATIONS mentioning "innovation living system" versus "innovation process".	NUMBER OF PUBLICATIONS at annual web conferences.
INCREASED KNOWLEDGE of innovation diffusion journey.	Higher Education and business enterprises in the high value manufacturing industry.	NUMBER OF PARTICIPANTS in vocational, higher education and continuous professional development offerings created. COMMERCIAL VALUE of training offering delivery.	NUMBER OF DERIVATIVES from project career framework and curriculum.
INCREASED COMMERCIAL VALUE of gaining knowledge regarding the innovation diffusion journey.	Higher Education and business enterprises in the high value manufacturing industry.	COMMERCIAL VALUE of vocational, higher education and continuous professional development offering delivery.	COMMERCIAL VALUE OF DERIVATIVE DELIVERY from project career framework and curriculum.
REDUCED TIME from ideation to market saturation.	Business enterprises in the high value manufacturing industry.	TIME from ideation to market saturation for innovations in high value manufacturing as assessed by the Innovation Diffusion Radar.	PERCEIVED SPEED of diffusion by stakeholders.
INCREASED NUMBER OF IDEAS passing from ideation to market saturation.	Business enterprises in the high value manufacturing industry.	IMPROVED SUCCESS RATE OF INNOVATIONS from ideation to market saturation in high value manufacturing as assessed by the Innovation Diffusion Radar.	PERCEIVED SPEED of diffusion by stakeholders.

IV.3. Dissemination and exploitation strategy

How will the dissemination activities be structured so as to ensure that the results will reach the relevant target groups? How will the exploitation activities be structured so as to use the results both within the project's lifetime and after? How will the results be mainstreamed and multiplied? (cfr: Annex II of the Programme Guide - sections 1 & 2 pages 312-317)

Dissemination and exploitation (D&E) activities are intended to reach the target groups to showcase the work that has been done as part of the action as effectively as possible. D&E includes project activities, the career framework and curriculum and interim results, lessons learned and outcomes and findings. D&E goes beyond project partners to enable a wider community to benefit from a work that has received EU funding, as well as to promote project efforts towards the objectives of Erasmus+.

D&E activities will be managed within a dedicated work package. The responsibility for implementation will be shared among all partners. Each partner will be involved in these activities. The quality of the implementation of the D&E plan will be managed using a dashboard structured based on financial capital created (i.e. through contributions of donors) and intangible assets related to the knowledge flows to be enabled. The details of the performance indicators will be developed by the accountable work package at the beginning of the project. These will include how to assess the starting condition, how to track changes and how to assess the final state. These insights will also be provided for helping structure the in-depth needs analysis. D&E goals include raising awareness (i.e. as measured by search engine rankings), extending the impact (i.e. as measured by the number of non-project participants at project events), engaging stakeholders and target groups (i.e. as measured by response rates to marketing efforts), sharing solutions and know how (as measured by the number of collaborators on project deliverables), influencing policy (i.e. as measured by the number of references to project work in new policies), influencing practice (i.e. as measured by manufacturing organization integration of project work in processes) and developing new partnerships (i.e. as measured by the number of "sister" projects the project aligns and regularly shares knowledge with).

The project language is English and key communication materials will be translated into all the languages of the project partners.

D&E will occur via a variety of approaches including:

- annual web conferences,
- regional events,
- an online community of applied learning and collaboration,
- conference presentations / papers and journal publications,
- the Erasmus+ Project Results Platform,
- the websites and (social media) marketing of the project and consortium partners,
- workshops held,
- delivery of the curriculum to project partners,
- press coverage of events and conferences,
- a public sponsorship page for contributions, and
- existing contacts and networks.

All project results will be developed to be easily tailored to the needs of others, transferred to new areas, sustained after the funding period has finished and / or used to influence future policy and practice. Deliverables will be in plain language and clear style so that they can be quickly and easily understood by all (including outsiders).

IV.4. Open access to the educational resources

Please describe how the materials, documents and media produced will be made available to the wider public through new technologies. Please explain also if you consider that this part is not applicable to your project.

Fundamental to the project is that all educational resources developed as part of the curriculum are made available under Open Education principles. All resources will be made available freely and openly for any interested party for non-commercial use with the sole requirement being related to proper attribution. Resources include lesson plans, course materials, learning objects, reports, the simulation and its code, plus any data gathered. The project intellectual property register will be used to identify and track relevant educational resources. In this respect educational resources will be released under the Creative Commons license "Attribution-NonCommercial-ShareAlike 4.0 International (CC BY-NC-SA 4.0). Access to resources will be made available via the publicly accessible collaboration community platform and SourceForge. There will be no registration requirements for accessing resources.

All resources will be made available in commonly used software types (i.e. Microsoft Office products) and not protected against editing. Learning objects will be compliant to the sharable content object reference model (SCORM – see https://scorm.com/) to enable easy transfer to the learning management system of the project (i.e. Moodle). The quality of the resources will be verified as part of the quality management work package and follow OER commons recommendations in addition to the EU Open Education 2030 vision on lifelong learning.

In order to support re-use of the developed resources the project also strives to ensure that such are made available via permanent knowledge management channels such as electronic publications with doi locations under open access conditions. In this respect "new" technologies are treated with caution unless they contain mechanisms for longer term availability. This will also ensure long term access to resources after project end.

PART V. Specific arrangements regarding learning mobility (if applicable)

The project does not include learning mobility activities.

PART VI. Additional project information (if applicable)

No additional project information is provided.

PART VII. Work Plan and Work Packages

VII.1. Work Plan and Work Packages (WPs) list

WP number	WP title
WP1	Preparation
WP2	Management
WP3	Quality Assurance
WP4	Effectiveness Evaluation
WP5	Dissemination and Exploitation
WP6	Create Career Frameworks
WP7	Create Collaboration Community
WP8	Create Simulation
WP9	Conduct In-Depth Needs Analysis
WP10	Create Case Studies
WP11	Identify Variables and Game Changers
WP12	Create Risk and Uncertainty Reduction Framework
WP13	Create Design Principles for Rapid Diffusion of Innovative Ideas
WP14	Implement Research Findings with Experimental Labs

VII.1.1. Work Package 1 – *Preparation*

WP1 description

WP No.1	Preparation
Work Package/Activity type	☒ Preparation ☐ Management ☐ Implementation (the substance of the work planned including production, testing, etc.) ☐ Quality Assurance (quality plan) ☐ Evaluation ☐ Dissemination and Exploitation of results
Title	Preparation
Description	This preparation WP describes the initial tasks to be completed upon official funding approval of the project. The WP is focused on ensuring that all legal, administrative, and infrastructure requirements are fully met in order to complete the project in the planned manner. The work package also includes training all participants in the project processes (i.e. funding and cost re-imbursement, reporting), training them in project methods and tools and conducting a face to face launch event. The work package furthermore ensures that key schedules for the first tasks (i.e. dates of workshops and case studies are agreed).
Tasks	• 1.1: Complete Grant and Consortium Agreement (Before Launch). Sign grant agreement with funding organization and sign consortium agreement with project participants (including agreement on intellectual property management and payment formalities). • 1.2: Confirm Participant Readiness (Before Launch). Ensure all project participants confirm resource availability as per project schedule. • 1.3: Review and Refresh Project Description. Review and refresh project description as baseline for change management including assurance of work package owners commitments and general marketing materials / briefing pack. • 1.4: Select Initial Open Source Software. Select initial open source software (solutions) for simulation, training and collaboration. On-board and inform participants. This may include simulation software (i.e. open source from www.insightmaker.com), training software (i.e. Moodle), a collaboration software, campaign management software, a project management software etc. Software should be suited for mobile use (including access by mobile app). • 1.5: Setup, Configure and Launch Project Server. Setup, configure and launch project server including key software applications to be used by the project. • 1.6: Enable Project Participants. Create initial training materials. Train all project participants in project approach, techniques and tools. This includes required project administration and financial processes (including eligibility of costs for re-imbursement). • 1.7: Create and Launch Project Risk Register. Populate and launch the project risk register. • 1.8: Create and Launch Project Communications Plan. Create and launch project communications plan (including website, intranet / file management

WP No.1	Preparation
	and social media marketing). Potential channels include Facebook, Twitter, LinkedIn, Sourceforge and Researchgate. • 1.9: Create and Launch Project Governance. Launch project governance with meeting schedules and ways of work.. • 1.10: Conduct Project Launch Event. Conduct face-to-face kick-off project meeting. • 1.11: Agree WP8 and WP10 Workshop Schedules. Confirm Workshop schedules. • 1.12: Create Project Corporate Image. Create project Corporate Image (includes project logo, central design guidelines and communication templates). • 1.13: Create and Launch IP Register: Populate and launch the project IP register. • 1.14: Create Mobile App. Create a mobile app integrating with communication plan and server software. • 1.15: Create Effectiveness Scorecard: Create initial scorecard for measuring the effectiveness of project efforts in creating intended value.
Estimated start date	M1
Estimated end date	M3
Lead organisation	P1
Participating organisations	P2-P28

WP1 Results (outputs and outcomes)

Expected result (output or outcome)	WP1	Preparation
	Title	1.1 Finalized Grant and Consortium Agreement
	Type	Output
	Description	Sign grant agreement with funding organization and sign consortium agreement with project participants (including agreement on intellectual property management and payment formalities). This result will be delivered by: P1
	Due date	M1
	Language(s)	English
	Media(s)	Paper publication (Signed grant and consortium agreement)
Dissemination level	☐ Public ☐ Restricted to other programme participants (including Commission services and project reviewers) ☒ Confidential, only for members of the consortium (including EACEA and Commission services and project reviewers)	

Expected result (output or outcome)	WP1	Preparation
	Title	1.2 Participant Readiness Confirmed
	Type	Output
	Description	All project participants confirm resource availability as per project schedule. This result will be delivered by: P1
	Due date	M1
	Language(s)	English
	Media(s)	Paper publication (Signed readiness confirmation form)
Dissemination level	☐ Public ☐ Restricted to other programme participants (including Commission services and project reviewers) ☒ Confidential, only for members of the consortium (including EACEA and Commission services and project reviewers)	

Expected result (output or outcome)	WP1	Preparation
	Title	1.3 Project Description Refreshed and Baselined
	Type	Output
	Description	Project description refreshed and baseline including assurance of work package owners commitments and general briefing pack. After completion of this activity the project description is baselined and placed under change management. This result will be delivered by: P1
	Due date	M1
	Language(s)	English
	Media(s)	Electronic version published in media (Refreshed project proposal with changes tracked)
Dissemination level	☒ Public ☐ Restricted to other programme participants (including Commission services and project reviewers) ☐ Confidential, only for members of the consortium (including EACEA and Commission services and project reviewers)	

Expected result (output or outcome)	WP1	Preparation
	Title	1.4 Open source software for collaboration, simulation and learning selected
	Type	Output

	Description	Open source software (solutions) for simulation, training and collaboration are selected. This may include simulation software (i.e. open source from www.insightmaker.com), training software (i.e. Moodle), collaboration software, campaign management software, a project management software etc. Software will be suited for mobile use (including access by mobile app). This result will be delivered by: P1
	Due date	M1
	Language(s)	English
	Media(s)	Electronic version published in media (List of software with download URLs and license conditions)
Dissemination level	☒ Public ☐ Restricted to other programme participants (including Commission services and project reviewers) ☐ Confidential, only for members of the consortium (including EACEA and Commission services and project reviewers)	

Expected result (output or outcome)	WP1	Preparation
	Title	1.5 Project Server Configured and Launched
	Type	Outcome
	Description	Project server setup, configured and launched including availability of selected software. This result will be delivered by: P21
	Due date	M2
	Language(s)	English
	Media(s)	Electronic version published online (Project server online)
Dissemination level	☒ Public ☐ Restricted to other programme participants (including Commission services and project reviewers) ☐ Confidential, only for members of the consortium (including EACEA and Commission services and project reviewers)	

Expected result (output or outcome)	WP1	Preparation
	Title	1.6 Project Participants Enabled to Participate
	Type	Outcome
	Description	Initial training materials created. All project participants trained in project approach, techniques and tools. This includes required project administration and financial processes (including eligibility of costs for re-imbursement). This result will be delivered by: P1

	Due date	M2
	Language(s)	English
	Media(s)	Electronic version published in media (Signed training participation lists)
Dissemination level	☒ Public ☐ Restricted to other programme participants (including Commission services and project reviewers) ☐ Confidential, only for members of the consortium (including EACEA and Commission services and project reviewers)	

Expected result (output or outcome)	WP1	Preparation
	Title	1.7 Project Risk Register Launched
	Type	Output
	Description	Project risk register populated and launched. This result will be delivered by: P2
	Due date	M1
	Language(s)	English
	Media(s)	Electronic version published in media (Risk register in Excel)
Dissemination level	☒ Public ☐ Restricted to other programme participants (including Commission services and project reviewers) ☐ Confidential, only for members of the consortium (including EACEA and Commission services and project reviewers)	

Expected result (output or outcome)	WP1	Preparation
	Title	1.8 Project Communications Plan Created and Launched
	Type	Output
	Description	Create and launch project communications plan (including website, intranet / file management and social media marketing). Potential channels include Facebook, Twitter, LinkedIn, Sourceforge and Researchgate. This result will be delivered by: P5
	Due date	M2
	Language(s)	English
	Media(s)	Electronic version published in media (Communication plan in Excel)
Dissemination level	☒ Public ☐ Restricted to other programme participants (including Commission services and project reviewers)	

	☐ Confidential, only for members of the consortium (including EACEA and Commission services and project reviewers)

Expected result (output or outcome)	WP1	Preparation
	Title	1.9 Project Governance Created and Launched
	Type	Output
	Description	Project governance with meeting schedules and ways of work created and launched. This result will be delivered by: P1
	Due date	M1
	Language(s)	English
	Media(s)	Electronic version published in media (Governance plan in Excel and calendar invites send)
Dissemination level	☒ Public ☐ Restricted to other programme participants (including Commission services and project reviewers) ☐ Confidential, only for members of the consortium (including EACEA and Commission services and project reviewers)	

Expected result (output or outcome)	WP1	Preparation
	Title	1.10 Face-to-Face Project Launch Event Conducted
	Type	Outcome
	Description	Face-to-face kick-off project meeting completed. This result will be delivered by: P1
	Due date	M3
	Language(s)	English
	Media(s)	Other (Signed participant lists with remediation plan for non-attendees scheduled and completed)
Dissemination level	☒ Public ☐ Restricted to other programme participants (including Commission services and project reviewers) ☐ Confidential, only for members of the consortium (including EACEA and Commission services and project reviewers)	

Expected result (output or outcome)	WP1	Preparation
	Title	1.11 WP1 and WP 3 Workshop Schedules Confirmed
	Type	Output
	Description	Workshop schedules confirmed.

		This result will be delivered by: P1
	Due date	M1
	Language(s)	English
	Media(s)	Electronic version published in media (Confirmed schedules in Excel and invitations issued)
Dissemination level	☒ Public ☐ Restricted to other programme participants (including Commission services and project reviewers) ☐ Confidential, only for members of the consortium (including EACEA and Commission services and project reviewers)	

Expected result (output or outcome)	WP1	Preparation
	Title	1.12 Project Image (incl. Communication and Deliverable Templates)
	Type	Output
	Description	Project Corporate Image completed (includes project logo, central design guidelines and communication templates). This includes the communication plan. This result will be delivered by: P5
	Due date	M1
	Language(s)	English
	Media(s)	Electronic version published in media (All templates available online and instructions issued to participants)
Dissemination level	☒ Public ☐ Restricted to other programme participants (including Commission services and project reviewers) ☐ Confidential, only for members of the consortium (including EACEA and Commission services and project reviewers)	

Expected result (output or outcome)	WP1	Preparation
	Title	1.13 IP Register Created
	Type	Output
	Description	Project IP register created. This result will be delivered by: P2
	Due date	M1
	Language(s)	English
	Media(s)	Electronic version published in media (IP Register Online)

Dissemination level	☒ Public ☐ Restricted to other programme participants (including Commission services and project reviewers) ☐ Confidential, only for members of the consortium (including EACEA and Commission services and project reviewers)

Expected result (output or outcome)	WP1	Preparation
	Title	1.14 Mobile App
	Type	Output
	Description	Create a mobile app integrating with communication plan and server software. This result will be delivered by: P21
	Due date	M1
	Language(s)	English
	Media(s)	Text document, presentation file and table calculation file.
Dissemination level	☒ Public ☐ Restricted to other programme participants (including Commission services and project reviewers) ☐ Confidential, only for members of the consortium (including EACEA and Commission services and project reviewers)	

Expected result (output or outcome)	WP1	Preparation
	Title	1.15 Effectiveness Scorecard
	Type	Output
	Description	Initial scorecard for measuring the effectiveness of project efforts in creating intended value. This result will be delivered by: P3
	Due date	M1
	Language(s)	English
	Media(s)	Electronic version published in media (Scorecard in Excel and distributed with guidance to all participants)
Dissemination level	☒ Public ☐ Restricted to other programme participants (including Commission services and project reviewers) ☐ Confidential, only for members of the consortium (including EACEA and Commission services and project reviewers)	

WP1 Explanation of Work Package expenditures

This WP requires a total of 130 working days distributed across all project partners in various roles with a total implementation cost of approximately €26,000 plus travel/subsistence costs of approximately €3,000. The costs of this WP represent approximately 3% of the total project budget. This WP also contains the expenditures for potential IT software licenses, IT hardware (i.e. third party hosting of the project server for the duration of the project) and any supporting IT hardware (i.e. a digital camera) or office infrastructure (i.e. project printer, project laptops etc.). These expenditures are reflected as unit costs for the researcher role at the rates for Germany for approximately 81 days equivalent.

VII.1.2. Work Package 2 – *Management*

WP2 description

WP No.2	Management
Work Package/Activity type	☐ Preparation ☒ Management ☐ Implementation (the substance of the work planned including production, testing, etc.) ☐ Quality Assurance (quality plan) ☐ Evaluation ☐ Dissemination and Exploitation of results
Title	Management
Description	This management work package describes the project governance activities to be completed over the course of the project in order to ensure project management activities are completed in accordance with time, cost and quality. Furthermore the work package ensures that the intended value creation is defined, monitored and achieved. All project governance is implemented.
Tasks	• 2.1: Effective Day-to-Day Project Management. Day-to-day management of project activities against plan (cost, schedule and quality). Includes change management. • 2.2: Coordination of Project Meetings and Events. Coordination of project meetings (including documentation of activities and results) and regional workshops and events (including documentation of activities and results). • 2.3: Formal Reporting. Create / coordinate and submit all necessary reports to funding agency. • 2.4: Monitor WP Progress and Results. Continuously monitor the progress of individual WPs against cost, schedule and quality. This also includes ensuring value creation based on an intellectual capital reporting framework for activities and deliverables. Continuously assess value for money of activities and deliverables based on intellectual capital reporting principles. • 2.5: Maintain IP Register. Continuously monitor the input and use of IP by project participants. • 2.6: Non-Profit Organization Application. Prepare application of the project as a non-profit organization with a membership fee model. This recurring revenue source will enable ongoing refinement of the curriculum at all levels. The success of this effort will depend upon (a) a sufficient number of founding members as legally required by the country the organization will be founded in (b) sufficient number of members paying annual fees that are able to support operational costs. • 2.7: Curriculum Accreditation Request: Manage preparation and submission of request for (ECT) (micro-) accreditation of stacked learning content. • 2.8: Curriculum Licensing Model. Design licencing model for the curriculum which is managed by the non-profit organization to be created. • 2.9: Software as a Service Licencing Model. Describe software as a service licencing model for the simulation which is managed by the non-profit organization to be created.

WP No.2	Management
	• 2.10: Communications Plan: Continuously support the implementation and monitor effectiveness of the project communications plan • 2.11: Project Risk Register: Continuously support the implementation and monitor effectiveness of the project risk register.
Estimated start date	M1
Estimated end date	M36
Lead organisation	P1
Participating organisations	P2-P28

WP2 Results (outputs and outcomes)

Expected result (output or outcome)	WP2	Management
	Title	2.1 Effective Day-to-Day Project Management
	Type	Outcome
	Description	Day-to-day management of project activities against plan (cost, schedule and quality). Includes change management. This result will be delivered by: P1
	Due date	M36
	Language(s)	English
	Media(s)	Electronic version published online (Project plan in Excel and updated monthly)
Dissemination level	☐ Public ☐ Restricted to other programme participants (including Commission services and project reviewers) ☒ Confidential, only for members of the consortium (including EACEA and Commission services and project reviewers)	

Expected result (output or outcome)	WP2	Management
	Title	2.2 Coordinated Project Meetings and Events
	Type	Outcome
	Description	Coordination of project meetings (including documentation of activities and results) and regional workshops and events (including documentation of activities and results). This result will be delivered by: P1
	Due date	M36
	Language(s)	English

	Media(s)	Electronic version published online (Schedule in Excel and all invitations issued)
Dissemination level	☐ Public ☐ Restricted to other programme participants (including Commission services and project reviewers) ☒ Confidential, only for members of the consortium (including EACEA and Commission services and project reviewers)	

Expected result (output or outcome)	WP2	Management
	Title	2.3 Formal Reporting
	Type	Output
	Description	Create / coordinate and submit all necessary reports to funding agency. This result will be delivered by: P1
	Due date	M36
	Language(s)	English
	Media(s)	Electronic version published in media (Report submission dates communicated and writing collaboration requirements planned)
Dissemination level	☐ Public ☐ Restricted to other programme participants (including Commission services and project reviewers) ☒ Confidential, only for members of the consortium (including EACEA and Commission services and project reviewers)	

Expected result (output or outcome)	WP2	Management
	Title	2.4 Work Package Progress and Results Monitored
	Type	Outcome
	Description	Progress of individual WPs continuously monitored against cost, schedule and quality. This also includes ensuring value creation based on an intellectual capital reporting framework for activities and deliverables. Continuously assess value for money of activities and deliverables based on intellectual capital reporting principles. This result will be delivered by: P1
	Due date	M36
	Language(s)	English
	Media(s)	Electronic version published in media (WP progress monitored weekly via online survey and completion invitations sent)
Dissemination level	☐ Public ☐ Restricted to other programme participants (including Commission services and project reviewers) ☒ Confidential, only for members of the consortium (including EACEA and Commission services and project reviewers)	

Expected result (output or outcome)	WP2	Management
	Title	2.5 IP Register Maintained
	Type	Outcome
	Description	Continuously monitor the input and use of IP by project participants. This result will be delivered by: P2
	Due date	M36
	Language(s)	English
	Media(s)	Electronic version published in media (IP register updated monthly)
Dissemination level	☐ Public ☐ Restricted to other programme participants (including Commission services and project reviewers) ☒ Confidential, only for members of the consortium (including EACEA and Commission services and project reviewers)	

Expected result (output or outcome)	WP2	Management
	Title	2.6 Non-Profit Organization Application
	Type	Output
	Description	Application of the project as a non-profit organization with a membership fee model prepared. This recurring revenue source will enable ongoing refinement of the curriculum at all levels. The success of this effort will depend upon (a) a sufficient number of founding members as legally required by the country the organization will be founded in (b) sufficient number of members paying annual fees that are able to support operational costs. This result will be delivered by: P1
	Due date	M33
	Language(s)	English
	Media(s)	Electronic version published in media (Application completed and prepared for submission)
Dissemination level	☐ Public ☐ Restricted to other programme participants (including Commission services and project reviewers) ☒ Confidential, only for members of the consortium (including EACEA and Commission services and project reviewers)	

Expected result (output or outcome)	WP2	Management
	Title	2.7 Curriculum Accreditation Request
	Type	Output

	Description	Manage preparation and submission of request for (ECT) (micro-) accreditation of stacked learning content. This result will be delivered by: P5
	Due date	M36
	Language(s)	English
	Media(s)	Electronic version published in media (Accredition request completed and submitted with signatures)
Dissemination level	☐ Public ☐ Restricted to other programme participants (including Commission services and project reviewers) ☒ Confidential, only for members of the consortium (including EACEA and Commission services and project reviewers)	

Expected result (output or outcome)	WP2	Management
	Title	2.8 Curriculum License Model
	Type	Output
	Description	Design licencing model for the curriculum which is managed by the non-profit organization to be created. This result will be delivered by: P1
	Due date	M36
	Language(s)	English
	Media(s)	Electronic version published in media (Curriculum license model agreed with signatures)
Dissemination level	☐ Public ☐ Restricted to other programme participants (including Commission services and project reviewers) ☒ Confidential, only for members of the consortium (including EACEA and Commission services and project reviewers)	

Expected result (output or outcome)	WP2	Management
	Title	2.9 Software as a Service Licencing Model
	Type	Output
	Description	Describe software as a service licencing model for the simulation which is managed by the non-profit organization to be created. This result will be delivery by: P1
	Due date	M36
	Language(s)	English

	Media(s)	Electronic version published in media (Software as a service licence model agreed with signatures)
Dissemination level	☐ Public ☐ Restricted to other programme participants (including Commission services and project reviewers) ☒ Confidential, only for members of the consortium (including EACEA and Commission services and project reviewers)	

Expected result (output or outcome)	WP2	Management
	Title	2.10 Project Communications Plan Implemented
	Type	Outcome
	Description	Continuously support the implementation and monitor effectiveness of the project communications plan This result will be delivered by: P5
	Due date	M36
	Language(s)	English
	Media(s)	Electronic version published in media (Communication plan activities conducted and tracked monthly)
Dissemination level	☐ Public ☐ Restricted to other programme participants (including Commission services and project reviewers) ☒ Confidential, only for members of the consortium (including EACEA and Commission services and project reviewers)	

Expected result (output or outcome)	WP2	Management
	Title	2.11 Project Risk Register monitored and updated monthly
	Type	Outcome
	Description	Continuously support the implementation and monitor effectiveness of the project risk register. This result will be delivered by: P2
	Due date	M36
	Language(s)	English
	Media(s)	Electronic version published in media (Risk register in Excel updated monthly)
Dissemination level	☐ Public ☐ Restricted to other programme participants (including Commission services and project reviewers) ☒ Confidential, only for members of the consortium (including EACEA and Commission services and project reviewers)	

WP2 Explanation of Work Package expenditures

This WP requires a total of 254 working days distributed across all project partners in various roles with a total implementation cost of approximately €77,000 plus travel/subsistence costs of approximately €54,000 (including for all participants to travel to four team meeting to be held in Lisbon (Portugal), Maynooth (Ireland), Padova (Italy) and finally again in Lisbon (Portugal). The costs of this WP represent approximately 14% of the total project budget.

VII.1.3. Work Package 3 – *Quality Assurance*

WP3 description

WP No.3	Quality Assurance
Work Package/Activity type	☐ Preparation ☐ Management ☐ Implementation (the substance of the work planned including production, testing, etc.) ☒ Quality Assurance (quality plan) ☐ Evaluation ☐ Dissemination and Exploitation of results
Title	Quality Assurance
Description	This WP creates and implements a quality assurance plan based on selected requirements aligned to ISO 21500. ISO 21500 provides high level description of concepts and processes that are considered to form good practice in project management. Selected requirements of ISO 21500 together with the implemented quality plan will help to assure the quality of project deliverables and project delivery to time and cost. Indicators relevant to the quality of the project deliverables will include formal quality (i.e. assessed against the quality requirements of academic journal submissions) and suitability for easily understanding and use by the target groups, especially those considered to be late adopters. Mechanisms intended for use include a peer review process before deliverables are made publicly available and the inclusion of quality reviews in the agendas of steering and work package level governance. Indicators relevant to the effectiveness of the outcomes of the project will be detailed in a reporting dashboard considering both financial and intangible knowledge flows. Mechanisms intended for use include surveys and semi-structured interviews with project partners. This is clearly separated to WP4 which will be responsible for monitoring the effectiveness of the outcomes of the project. Indicators relevant to the quality of the project deliverables will include formal quality (i.e. assessed against the quality requirements of academic journal submissions) and suitability for easily understanding and use by the target groups, especially those considered to be late adopters. Mechanisms intended for use include a peer review process before deliverables are made publicly available and the inclusion of quality reviews in the agendas of steering and work package level governance. Indicators relevant to the effectiveness of the outcomes of the project will be detailed in a reporting dashboard considering both financial and intangible knowledge flows. Mechanisms intended for use include surveys and semi-structured interviews with project partners.
Tasks	• 3.1: Create Quality Plan. Creates and implement a quality plan. • 3.2: Monitor Content Review of Results. Using an appropriate process monitor the content review of project results through supporting project partners. • 3.3: Monitor Formal Quality of Results. Using an appropriate process monitor the formal quality of project results in alignment with dissemination channel requirements (i.e. templates). • 3.4: Monitor Timely Submission of Results. Using an appropriate process monitor the timing of submissions of project results as per the project plan.

WP No.3	Quality Assurance
	• 3.5: Monitor Collaboration Quality. Using an appropriate process monitor the quality of collaboration among WP participants.
Estimated start date	M1
Estimated end date	M36
Lead organisation	P2
Participating organisations	P1, P3-P28

WP3 Results (outputs and outcomes)

Expected result (output or outcome)	WP3	Quality Assurance
	Title	3.1 Quality Plan Implemented
	Type	Outcome
	Description	Quality plan created and implemented. This result will be delivered by: P2
	Due date	M1
	Language(s)	English
	Media(s)	Electronic version published in media (Quality plan progress updated monthly)
Dissemination level	☐ Public ☐ Restricted to other programme participants (including Commission services and project reviewers) ☒ Confidential, only for members of the consortium (including EACEA and Commission services and project reviewers)	

Expected result (output or outcome)	WP3	Quality Assurance
	Title	3.2 Content Quality of Results (incl. Peer Review and Remediation Monitoring)
	Type	Outcome
	Description	An appropriate highly scripted process used to monitor the content review of project results through supporting project partners. This result will be delivered by: P2
	Due date	M36
	Language(s)	English
	Media(s)	Electronic version published in media (Peer review of WP deliverable content completed)

Dissemination level	☐ Public ☐ Restricted to other programme participants (including Commission services and project reviewers) ☒ Confidential, only for members of the consortium (including EACEA and Commission services and project reviewers)

Expected result (output or outcome)	WP3	Quality Assurance
	Title	3.3 Formal Quality of Results (incl. Coordinate Lectoring)
	Type	Outcome
	Description	An appropriate process used to monitor the formal quality of project results in alignment with dissemination channel requirements. This includes lectoring of deliverables. This result will be delivered by: P2
	Due date	M36
	Language(s)	English
	Media(s)	Electronic version published in media (Peer review of WP deliverable formal requirements completed)
Dissemination level	☐ Public ☐ Restricted to other programme participants (including Commission services and project reviewers) ☒ Confidential, only for members of the consortium (including EACEA and Commission services and project reviewers)	

Expected result (output or outcome)	WP3	Quality Assurance
	Title	3.4 Timely Submission of Results
	Type	Outcome
	Description	An appropriate process used to monitor the timing of submissions of project results as per the project plan. This result will be delivered by: P2
	Due date	M36
	Language(s)	English
	Media(s)	Electronic version published in media (WP deliverables submitted to and from quality reviews by required dates)
Dissemination level	☐ Public ☐ Restricted to other programme participants (including Commission services and project reviewers) ☒ Confidential, only for members of the consortium (including EACEA and Commission services and project reviewers)	

	WP3	Quality Assurance

Expected result (output or outcome)	Title	3.5 Collaboration Quality
	Type	Outcome
	Description	An appropriate process used to monitor the quality of collaboration among WP participants. This will include monitoring meeting attendance and contributions. This result will be delivered by: P2
	Due date	M36
	Language(s)	English
	Media(s)	Electronic version published in media (Participation assessment of all project collaboration events and activities)
Dissemination level	☐ Public ☐ Restricted to other programme participants (including Commission services and project reviewers) ☒ Confidential, only for members of the consortium (including EACEA and Commission services and project reviewers)	

WP3 Explanation of Work Package expenditures

This WP requires a total of 272 working days distributed across all project partners in various roles with a total implementation cost of approximately €42,000 plus travel/subsistence costs of approximately €1,500. The costs of this WP represent approximately 5% of the total project budget.

VII.1.4. Work Package 4 – *Effectiveness Evaluation*

WP4 description

WP No.4	Effectiveness Evaluation
Work Package/Activity type	☐ Preparation ☐ Management ☐ Implementation (the substance of the work planned including production, testing, etc.) ☐ Quality Assurance (quality plan) ☒ Evaluation ☐ Dissemination and Exploitation of results
Title	Effectiveness Evaluation
Description	The effectiveness evaluation work package aims to ensure the internal and external evaluation of the main project outcome, namely the career framework, by assessing the quality of outputs as perceived and realized by participants, evaluate the effectiveness and benefits of the tools developed explore unexpected results, and seek evidence that the training developed for the specific context provides value for the diverse range of organizations and individuals involved. Insights derived from this ongoing work package will be fed back to the project in the form of improvement suggestions aligned to the value creation aspiration of the efforts. The work package will focus on evaluating the specific areas of knowledge transfer and effectiveness of the measures developed, using both a qualitative and quantitative approach. Contribution of other bodies outside the formal partnership (i.e. professional associations, higher education and vocational training teaching staff from organizations not directly involved in the partnership) will be pro-actively solicited.
Tasks	• 4.1: Create External Advisory Board. Establish an external advisory board enabling contribution of other bodies outside the formal partnership (i.e. professional associations, higher education and vocational training teaching staff from organizations not directly involved in the partnership) to the effectiveness evaluation. • 4.2: Evaluate WP Results. In collaboration with the external advisory board the work package will develop a set of indicators to ensure the appropriateness of WP results for consumption by various adopter categories (i.e. innovators and late adopters) of the career framework. The indicators will be assessed through review of results, surveys and semi-structured interviews. • 4.3: Evaluate Career Framework Module Value Creation. In collaboration with the external advisory board, the participants of the career framework modules, as these evolve and are delivered during the course of the project, the work package will assess perceived and actual value for the participants. The value will be assessed through review of results, surveys and semi-structured interviews aligned to the financial and intellectual capital creation framework created separately in the project. • 4.4: Provide Improvement Suggestions. Based on the ongoing evaluation of work package results and career framework module value creation provide actionable suggestions for changing such in order to improve results and outcomes from a participant / consumer perspective. This may include design guidelines for increasing the speed of value creation and recommendations for changing the system(s) through which they are delivered.

WP No.4	Effectiveness Evaluation
Estimated start date	M1
Estimated end date	M36
Lead organisation	P3
Participating organisations	P1, P2, P4-P28

WP4 Results (outputs and outcomes)

Expected result (output or outcome)	WP4	Effectiveness Evaluation
	Title	4.1 External Advisory Board Created
	Type	Outcome
	Description	External advisory board enabling contribution of other bodies outside the formal partnership (i.e. professional associations, higher education and vocational training teaching staff from organizations not directly involved in the partnership) to the effectiveness evaluation created. This result will be delivered by: P1
	Due date	M3
	Language(s)	English
	Media(s)	Electronic version published in media (Signed list of advisors)
Dissemination level	☐ Public ☐ Restricted to other programme participants (including Commission services and project reviewers) ☒ Confidential, only for members of the consortium (including EACEA and Commission services and project reviewers)	

Expected result (output or outcome)	WP4	Effectiveness Evaluation
	Title	4.2 WP Results Evaluated
	Type	Outcome
	Description	In collaboration with the external advisory board a set of indicators to ensure the appropriateness of work package results for consumption by various adopter categories (i.e. innovators and late adopters) of the career framework created and implemented. This result will be delivered by: P3
	Due date	M36
	Language(s)	English
	Media(s)	Electronic version published in media (WP deliverables reviewed)

Dissemination level	☐ Public ☐ Restricted to other programme participants (including Commission services and project reviewers) ☒ Confidential, only for members of the consortium (including EACEA and Commission services and project reviewers)

Expected result (output or outcome)	WP4	Effectiveness Evaluation
	Title	4.3 Career Framework Module Value Creation Monitored
	Type	Outcome
	Description	In collaboration with the external advisory board, the participants of the career framework modules, as these evolve and are delivered during the course of the project, perceived and actual value for the participants is evaluated. The value will be assessed through review of results, surveys and semi-structured interviews aligned to the financial and intellectual capital creation framework created separately in the project. This result will be delivered by: P3
	Due date	M36
	Language(s)	English
	Media(s)	Electronic version published in media (Training effectiveness evaluation)
Dissemination level	☐ Public ☐ Restricted to other programme participants (including Commission services and project reviewers) ☒ Confidential, only for members of the consortium (including EACEA and Commission services and project reviewers)	

Expected result (output or outcome)	WP4	Effectiveness Evaluation
	Title	4.4 Improvement Suggestions Provided
	Type	Outcome
	Description	Based on the ongoing evaluation of WP results and career framework module value creation actionable suggestions are provided for changing such in order to improve results and outcomes from a participant / consumer perspective. This may include design guidelines for increasing the speed of value creation and recommendations for changing the system(s) through which they are delivered. This result will be delivered by: P3
	Due date	M36
	Language(s)	English
	Media(s)	Electronic version published in media (Improvement suggestions for career framework training delivery and work package results gathered)
Dissemination level	☐ Public ☐ Restricted to other programme participants (including Commission services and project reviewers)	

	☒ Confidential, only for members of the consortium (including EACEA and Commission services and project reviewers)

WP4 Explanation of Work Package expenditures

This WP requires a total of 212 working days distributed across all project partners in various roles with a total implementation cost of approximately €35,000 plus travel/subsistence costs of approximately €1,500. The costs of this WP represent approximately 4% of the total project budget.

VII.1.5. Work Package 5 – *Dissemination and Exploitation*

WP5 description

WP No.5	Dissemination and Exploitation
Work Package/Activity type	☐ Preparation ☐ Management ☐ Implementation (the substance of the work planned including production, testing, etc.) ☐ Quality Assurance (quality plan) ☐ Evaluation ☒ Dissemination and Exploitation of results
Title	Dissemination and Exploitation
Description	Dissemination and exploitation (D&E) activities are intended to reach the target groups to showcase the work that has been done as part of the action as effectively as possible. D&E includes tasks activities / results, the career framework and curriculum and interim results, lessons learned and outcomes and findings. D&E goes beyond project partners to enable a wider community to benefit from a work that has received EU funding, as well as to promote project efforts towards the objectives of Erasmus+. D&E activities are more than awareness building and aim to fulfil key marketing activities in collaboration with the other WPs. The quality of the implementation of the D&E plan will be managed using a dashboard structured based on financial capital created and intangible assets related to the knowledge flows to be enabled. The details of the performance indicators will be developed by the accountable WP at the beginning of the project. These will include how to assess the starting condition, how to track changes and how to assess the final state. These insights will also be provided for helping structure the in-depth needs analysis. D&E goals include raising awareness (i.e. as measured by search engine rankings), extending the impact, engaging stakeholders and target groups, sharing solutions and know how (as measured by the number of collaborators on project deliverables), influencing policy, influencing practice and developing new partnerships. All project results will be made available on the Erasmus+ Project Results Platform. This WP is closely aligned with WP4 "Effectiveness Evaluation". See also https://www.ffg.at/sites/default/files/horizon2020indicators.pdf.
Tasks	• 5.1: Determine Performance Indicators. Select relevant Horizon 2020 performance indicators related to dissemination and exploitation in the context of the project (i.e. number of researchers involved, number of business organizations participating, number of conference participation, number of individuals trained). • 5.2: Assess Starting Conditions. Determine measurement method for selected key performance indicators based on the structure of the intangible assets monitor. Perform initial assessment. • 5.3: Create Improvement Activities Plan. Continuously monitor dissemination and exploitation activities in order to identify and create improvement activities which are appropriately socialized to the relevant project partners. • 5.4: Raise Awareness. In collaboration with the communications plan, training efforts, effectiveness evaluation, the career framework efforts and the applied learning and collaboration community efforts coordinate measures to raise awareness and dissemination of project efforts within the project community.

WP No.5	Dissemination and Exploitation
	• 5.5: Extend Impact. Extend the efforts to raise awareness outside of the project community to specifically improve the performance indicators selected. • 5.6: Engage Target Groups. Create and implement focused measures for target groups that increase and extend awareness with a special focus on the effective impact. • 5.7: Share Solutions and Know How. Monitor, facilitate and increase the share of solutions developed by the project within the target groups. • 5.8: Influence Policy and Practice. Identify and implement actionable interventions to influence policy and practice to address the project aims. • 5.9: Grow Partnerships. Create, extend and coordinate partnerships of the project with relevant higher level Horizon 2020 efforts (i.e. with the EIT Manufacturing – see https://eit.europa.eu/our-communities/eit-manufacturing). • 5.10: Assess Final State. Determine finale indicator values.
Estimated start date	M1
Estimated end date	M36
Lead organisation	P4
Participating organisations	P1-P3, P5-P28

WP5 Results (outputs and outcomes)

Expected result (output or outcome)	WP5	Dissemination and Exploitation
	Title	5.1 Performance Indicators Selected
	Type	Output
	Description	Relevant Horizon 2020 performance indicators related to dissemination and exploitation in the context of the project (i.e. number of researchers involved, number of business organizations participating, number of conference participation, number of individuals trained) selected. This result will be delivered by: P1
	Due date	M3
	Language(s)	English
	Media(s)	Electronic version published in media (Excel scorecard of performance indicators (awareness, impact, target groups engaged, solutions and know how shared, policy and practice influenced and partnerships grown) with explanation)
Dissemination level	☒ Public ☐ Restricted to other programme participants (including Commission services and project reviewers) ☐ Confidential, only for members of the consortium (including EACEA and Commission services and project reviewers)	

Expected result (output or outcome)	WP5	Dissemination and Exploitation
	Title	5.2 Starting Conditions Assessed
	Type	Outcome
	Description	Measurement method for selected key performance indicators based on the structure of the intangible assets monitor determined and initial assessment performed. This result will be delivered by: P4
	Due date	M6
	Language(s)	English
	Media(s)	Electronic version published in media (Initial value of performance indicators agreed)
Dissemination level	☒ Public ☐ Restricted to other programme participants (including Commission services and project reviewers) ☐ Confidential, only for members of the consortium (including EACEA and Commission services and project reviewers)	

Expected result (output or outcome)	WP5	Dissemination and Exploitation
	Title	5.3 Improvement activities plan created and implemented
	Type	Outcome
	Description	Continuously monitor dissemination and exploitation activities in order to identify and create improvement activities which are appropriately socialized to the relevant project partners. This result will be delivered by: P4
	Due date	M6
	Language(s)	English
	Media(s)	Electronic version published in media (Improvement activities delivered against plan)
Dissemination level	☒ Public ☐ Restricted to other programme participants (including Commission services and project reviewers) ☐ Confidential, only for members of the consortium (including EACEA and Commission services and project reviewers)	

Expected result (output or outcome)	WP5	Dissemination and Exploitation
	Title	5.4 Awareness Raised
	Type	Outcome
	Description	In collaboration with the communications plan, exploitation efforts, effectiveness evaluation, the career framework efforts and the applied

		learning and collaboration community efforts measures coordinated to raise awareness and dissemination of project efforts within the project community. This result will be delivered by: P4
	Due date	M36
	Language(s)	English
	Media(s)	Electronic version published in media (Monthly monitoring of awareness related performance indicators)
Dissemination level	☒ Public ☐ Restricted to other programme participants (including Commission services and project reviewers) ☐ Confidential, only for members of the consortium (including EACEA and Commission services and project reviewers)	

Expected result (output or outcome)	WP5	Dissemination and Exploitation
	Title	5.5 Impact Extended
	Type	Outcome
	Description	Efforts extended to raise awareness outside of the project community to specifically improve the performance indicators selected. This result will be delivered by: P4
	Due date	M36
	Language(s)	English
	Media(s)	Electronic version published in media (Monthly monitoring of impact related performance indicators)
Dissemination level	☒ Public ☐ Restricted to other programme participants (including Commission services and project reviewers) ☐ Confidential, only for members of the consortium (including EACEA and Commission services and project reviewers)	

Expected result (output or outcome)	WP5	Dissemination and Exploitation
	Title	5.6 Target Groups Engaged
	Type	Outcome
	Description	Focused measures for target groups that increase and extend awareness with a special focus on the effective impact created and performed. This result will be delivered by: P4
	Due date	M36
	Language(s)	English
	Media(s)	Electronic version published in media (Monthly monitoring of target group engagement performance indicators)

Dissemination level	☒ Public ☐ Restricted to other programme participants (including Commission services and project reviewers) ☐ Confidential, only for members of the consortium (including EACEA and Commission services and project reviewers)

Expected result (output or outcome)	WP5	Dissemination and Exploitation
	Title	5.7 Solutions and Know How Shared
	Type	Outcome
	Description	The share of solutions developed by the project within the target groups monitored, facilitated and increased. This result will be delivered by: P4
	Due date	M36
	Language(s)	English
	Media(s)	Electronic version published in media (Monthly monitoring of knowledge sharing performance indicators)
Dissemination level	☒ Public ☐ Restricted to other programme participants (including Commission services and project reviewers) ☐ Confidential, only for members of the consortium (including EACEA and Commission services and project reviewers)	

Expected result (output or outcome)	WP5	Dissemination and Exploitation
	Title	5.8 Policy and Practice Influenced
	Type	Outcome
	Description	Actionable interventions to influence policy and practice to address the project aims identified and implemented. This result will be delivered by: P4
	Due date	M36
	Language(s)	English
	Media(s)	Electronic version published in media (Monthly monitoring of influence related performance indicators)
Dissemination level	☒ Public ☐ Restricted to other programme participants (including Commission services and project reviewers) ☐ Confidential, only for members of the consortium (including EACEA and Commission services and project reviewers)	

Expected result (output or outcome)	WP5	Dissemination and Exploitation
	Title	5.9 Partnerships Grown

	Type	Outcome
	Description	Partnerships of the project with relevant higher level Horizon 2020 efforts (i.e. with the EIT Manufacturing – see https://eit.europa.eu/our-communities/eit-manufacturing) created, extended and coordinated. This result will be delivered by: P4
	Due date	M36
	Language(s)	English
	Media(s)	Electronic version published in media (Monthly monitoring of partnership growth related performance indicators)
Dissemination level	☒ Public ☐ Restricted to other programme participants (including Commission services and project reviewers) ☐ Confidential, only for members of the consortium (including EACEA and Commission services and project reviewers)	

Expected result (output or outcome)	WP5	Dissemination and Exploitation
	Title	5.10 Final State Assessed
	Type	Outcome
	Description	The final value of indicators selected is assessed and improvement measures going beyond the end of the project are suggested. This result will be delivered by: P4
	Due date	M36
	Language(s)	English
	Media(s)	Electronic version published in media (Final value of indicators assessed)
Dissemination level	☒ Public ☐ Restricted to other programme participants (including Commission services and project reviewers) ☐ Confidential, only for members of the consortium (including EACEA and Commission services and project reviewers)	

WP5 Explanation of Work Package expenditures

This WP requires a total of 219 working days distributed across all project partners in various roles with a total implementation cost of approximately €52,000 plus travel/subsistence costs of approximately €1,500. The costs of this WP represent approximately 6% of the total project budget.

VII.1.6. Work Package 6 – *Create Career Frameworks*

WP6 description

WP No.6	Create Career Frameworks
Work Package/Activity type	☐ Preparation ☐ Management ☒ Implementation (the substance of the work planned including production, testing, etc.) ☐ Quality Assurance (quality plan) ☐ Evaluation ☒ Dissemination and Exploitation of results
Title	Create and Pilot Curriculum
Description	This implementation work package creates and pilots a curriculum based career framework as a specialisation of the "Responsible and Flexible Career Development Framework for Researchers" focussed on the acceleration of the diffusion of innovation (eco-systems) from ideation to market saturation in high value manufacturing. The curriculum based career framework will consist of a modular syllabus aligned with the "Curriculum Guidelines for Key Enabling Technologies (KETs) and Advanced Manufacturing Technologies (AMT)" (http://skills4industry.eu), will be made available based on the principles of Open Education (https://ec.europa.eu/jrc/en/open-education) and also be made available as a joint-accredited set of accredited stackable (micro-) certificate courses provided by participating institutes of higher education as vocational, higher education and continuous professional development offerings. The work package will culminate in an application for using the piloted curriculum as an Erasmus Mundus Joint Masters Degree program under the then relevant Horizon Europe program. This work package runs throughout the complete project and continuously creates and implements modules of an integrated syllabus based on an evolving curriculum strategy. All educational content created will be in English, SCORM compliant and hosted on the learning platform. The basic curriculum structure is reflected in the proposal structure: create a living systems simulation of the ideation to market saturation journey, design ideas for diffusing through the simulation, monitor and accelerate the progression of ideas from ideation to market saturation.
Tasks	• 6.1: Create Curriculum Strategy. Create a curriculum strategy based on learner needs and best practices identified in the needs analysis as a set of modularized short and long term curriculum goals and intended learning outcomes. • 6.2: Create Collaboration and Ideation Framework. Create a living (eco-) systems representation and description of the collaboration patterns needed between institutions of higher education, business enterprises, involved roles, individuals and peers, and communities regarding the engagement needed to achieve the defined strategy. • 6.3: Create Learning Content. Develop the learning content of the curriculum related both to the identified technical and soft skill sets of relevance within a single content management system suited for serving the delivery mechanisms following Open Education principles. • 6.4: Determine and Enable Delivery Mechanisms. Determine and enable the technical and soft skill requirements for delivery of the learning content in a wide variety of ways to meet learners´ expectations and learning preferences.

WP No.6	Create Career Frameworks
	• 6.5: Define and Create Learning Environments. Define the tangible and intangible requirements for and implement these in the physical and virtual spaces needed in order to support the delivery of the learning content via the content management system with the delivery mechanisms of relevance. • 6.6: Enable Iterative (ECTS) Recognition Application. Enable the formal recognition and preparation for accreditation (including ECTS agreement) of the stackable micro-certified syllabi for content delivery from vocational institutes, higher education organizations and continuous professional development institutes in the regions where the project events (i.e. use case development, verification and implementation) are held. • 6.7: Ensure Participation. Ensure sufficient participation in course content delivery offerings at vocational, higher education and continuous professional development levels by project participants through appropriate marketing efforts. • 6.8 Learning Content Iteratively Piloted with Participating Businesses. As stackable learning content develops during project progression, pilot with participating business. • 6.9: Conduct Ideation Pilots. Ideation pilot workshops are an integral part of the learning content and focused on applying a structured ideation process for innovation discovery. • 6.10: Track Diffusion of Ideation Pilot Results: After ideation pilots implement a process for tracking the diffusion of generated ideas using the simulation as a framework. Feed ongoing insights back to project partners to ensure continuously alignment of applied diffusion learnings with other activities. • 6.11: Prepare Application for Erasmus Mundus Joint Masters Degree Program Approval. Prepare application for approval of the developed and piloted curriculum as a joint-accredited Erasmus Mundus Joint Masters Degree program. • 6.12: Provide Policy Guidance. Provide recommendations for improving policy at EU, national and regional levels in order to enable rapid diffusion of the curriculum to a wider range of countries, regions and institutions, including a wider spread of potential participants at all levels of qualification.
Estimated start date	M1
Estimated end date	M36
Lead organisation	P5 and P11 jointly
Participating organisations	P1-P4, P6-P10, P12-P28

WP6 Results (outputs and outcomes)

Expected result (output or outcome)	WP6	Create Career Frameworks
	Title	6.1 Curriculum Strategy (incl. Definition of Required Learning Content)
	Type	Output
	Description	A curriculum strategy based on learner needs and best practices identified in the needs analysis and shaped as a set of modularized short and long term curriculum goals and intended learning outcomes through offerings of diverse duration and emphasis. Learner needs will include not only perspective of learning outcomes, but also identify different learning styles, learning

		motivations, continuous learning perspectives, social / emotional aspects, and integration with ways of working. Curriculum goals will include both from short term perspectives focused on adopting new ways of working to achieve increased productivity and efficiency, and long term objectives focused on cultivating and maintaining cultures of learning and sense of meaningful purpose. A holistic combination of metrics will be included based upon principles of intellectual capital reporting to assess and monitor achievement of curriculum goals and intended learning goals from a short and long term perspective. These metrics will also serve to improve the strategy and related activities. Significant input is expected from the work package creating the simulation to primarily define required technical skills and from the in-depth needs analysis to ensure that existing best practice and required soft-skills are understood. This result will be delivered by: P5
	Due date	M3
	Language(s)	English
	Media(s)	Electronic version published in media
Dissemination level	☒ Public ☐ Restricted to other programme participants (including Commission services and project reviewers) ☐ Confidential, only for members of the consortium (including EACEA and Commission services and project reviewers)	

Expected result (output or outcome)	WP6	Create Career Frameworks
	Title	6.2 Collaboration and Ideation Framework
	Type	Output
	Description	A living (eco-) systems representation and description of the collaboration patterns needed between institutions of higher education, business enterprises, involved roles, individuals and peers, and communities regarding the engagement needed to achieve the defined strategy. The living (eco-) system will be embedded in the simulation and risk and uncertainty framework thus including performance metrics, scenarios and actionable interventions to improve performance on a continuing basis. While the specific (independent) variables will be identified during the course of other WPs initial attention will be given to factors such as learners´ intrinsic motivations, emotional aspects of learning, dynamics of knowledge sharing networks and the role of social media within such living (eco-) systems. The output will furthermore highlight gaps to existing best practice models and pilot outputs in the validation and implementation work packages. The output will be defined along the six dimensions of impact, self-efficacy, autonomy, involvement in decision-making, opportunities for professional growth and professional status. The output will also highlight potential game changers in performance for the living (eco-) systems from a technological and collaboration organization perspective. This result will be delivered by: P5
	Due date	M3
	Language(s)	English

	Media(s)	Electronic version published in media
Dissemination level	☒ Public ☐ Restricted to other programme participants (including Commission services and project reviewers) ☐ Confidential, only for members of the consortium (including EACEA and Commission services and project reviewers)	

Expected result (output or outcome)	WP6	Create Career Frameworks
	Title	6.3 Learning Content
	Type	Output
	Description	The learning content of the curriculum related both to the identified technical and soft skill sets of relevance within a single content management system suited for serving the delivery mechanisms following Open Education principles. The learning content is accompanied by a detailed syllabus with relevant and learning techniques in order to address learner needs from a short and long term perspective. The syllabus will provide the structure for integrated theory and activities, define roles and expectations in order to ensure clear and measurable learning outcomes. Locations, schedules, learning objectives, required materials, recommended prior certifications, attendance requirements etc. will be defined, including assessment methodologies. The content will be structured to support vocational, higher educational and continuous professional development contexts. Special emphasis will be placed on providing the content via a diverse spectrum of established (virtual) learning environments and delivery mechanisms. Regional considerations and requirements will be addressed. Novel content forms such as scenario based role playing scripts ("The Innovation Journey" play-in-a-day) and (serious) games will also be offered as the basis for experimental innovation. Processes for keeping the learning content up-to-date after project end will be integrated. This result will be delivered by: P5
	Due date	M30
	Language(s)	English
	Media(s)	Electronic version published in media (Learning content in all relevant media forms for delivery mechanisms and level (i.e. higher education, vocational, continuous professional development))
Dissemination level	☒ Public ☐ Restricted to other programme participants (including Commission services and project reviewers) ☐ Confidential, only for members of the consortium (including EACEA and Commission services and project reviewers)	

Expected result (output or outcome)	WP6	Create Career Frameworks
	Title	6.4 Delivery Mechanisms Determined and Enabled
	Type	Output
	Description	The technical and soft skill requirements for delivery of the learning content in a wide variety of ways to meet learners´ expectations and learning

		preferences, and learning content made available for delivery through these mechanisms. The output will at a minimum include learning content "ready for use" via face-to-face learning, via an open access e-learning platform, via an open access m-learning platform, via open access MOOCs and SPOCs, and via (virtual / immersive) games. Delivery mechanisms will be designed to represent an integrated enhancing system of approaches centred on the simulation. Delivery mechanisms will also align with such mechanisms found embedded in participating organizations. Open Education principles will be reflected. This result will be delivered by: P5
	Due date	M6
	Language(s)	English
	Media(s)	Electronic version published in media (Excel listing with corresponding enablement on project server)
Dissemination level	☒ Public ☐ Restricted to other programme participants (including Commission services and project reviewers) ☐ Confidential, only for members of the consortium (including EACEA and Commission services and project reviewers)	

Expected result (output or outcome)	WP6	Create Career Frameworks
	Title	6.5 Learning Environments Defined and Created
	Type	Output
	Description	The tangible and intangible requirements for and their implementation in the physical and virtual spaces needed in order to support the delivery of the learning content via the content management system with the delivery mechanisms of relevance. This output ensures that the verification and implementation work packages are fully supported from a learning perspective in order validate the effectiveness of these learning environments for meeting assessment, recognition and quality criteria. This work package will furthermore identify and describe how learners can configure (combinations of) learning environments to suit their learning preferences and meet relevant formal vocational, higher education and continuous professional development requirements. Learning environments will also reflect design criteria for participants with disabilities and / or access restrictions. This result will be delivered by: P5
	Due date	M6
	Language(s)	English
	Media(s)	Electronic version published in media (Excel listing with corresponding enablement on project server)
Dissemination level	☒ Public ☐ Restricted to other programme participants (including Commission services and project reviewers) ☐ Confidential, only for members of the consortium (including EACEA and Commission services and project reviewers)	

Expected result (output or outcome)	WP6	Create Career Frameworks
	Title	6.6 (Stakeholder) Assessment
	Type	Output
	Description	A set of assessments to monitor progress towards curriculum learning outcomes and required collaboration behaviours of the living (eco-) system as modelled in the simulation. The assessments will be aligned to the defined intellectual capital reporting approach and consist of self-assessments, (360 degree) peer assessments, and institutional assessments, and include adaptive recommendations for relevant improvements. Assessments will furthermore align to the recognition needs of content and relevant vocational, higher education and continuous professional development expectations. Assessments will also be provided in a wider variety of formats including quizzes, interviews, assignments, presentations, and practical examinations etc. in both manual and automated approaches. Assessments will include not only participants consuming content, but also individuals and organizations tasked with the delivery, maintenance and continuous improvement of this content. This result will be delivered by: P5
	Due date	M6
	Language(s)	English
	Media(s)	Electronic version published in media
Dissemination level	☒ Public ☐ Restricted to other programme participants (including Commission services and project reviewers) ☐ Confidential, only for members of the consortium (including EACEA and Commission services and project reviewers)	

Expected result (output or outcome)	WP6	Create Career Frameworks
	Title	6.7 Iterative (ECTS) Recognition Application
	Type	Output
	Description	The formal recognition and preparation of the accreditation of the syllabi for content delivery from vocational institutes (i.e. chambers of commerce), higher education organizations (i.e. participating universities) and continuous professional development institutes in the regions where the project events (i.e. use case development, verification and support for implementation) are held. This formal recognition also includes relevant European Credit Transfer System (ECTS) assignment for higher education offerings and listing of the syllabi in the formal offerings of the relevant (regional) training and education organizations. Preference will be given to syllabi which are joint-recognized across regions. Informal (social) recognition will be achieved through confirmation of the skills development and value of such through participating business enterprises. The result will be coordinated with the EURAXESS network and organizations to increase the transferability of the framework to other national and institutional contexts. This result will be delivered by: P5
	Due date	M18

	Language(s)	English
	Media(s)	Electronic version published in media
Dissemination level	☒ Public ☐ Restricted to other programme participants (including Commission services and project reviewers) ☐ Confidential, only for members of the consortium (including EACEA and Commission services and project reviewers)	

Expected result (output or outcome)	WP6	Create Career Frameworks
	Title	6.8 Participation Ensured
	Type	Output
	Description	Participation in course content delivery offerings at vocational, higher education and continuous professional development levels by project participants. Each delivery offering will be completed at least once by a suitably sized audience whereby at least 20 participants per module will be aimed for. Relevant recruitment activities for participation will be conducted as the syllabi for content modules becomes available during the course of the project. This result will be delivered by: P5
	Due date	M36
	Language(s)	English
	Media(s)	Electronic version published in media (Signed participant lists)
Dissemination level	☒ Public ☐ Restricted to other programme participants (including Commission services and project reviewers) ☐ Confidential, only for members of the consortium (including EACEA and Commission services and project reviewers)	

Expected result (output or outcome)	WP6	Create Career Frameworks
	Title	6.9 Learning Content Iteratively Piloted with Participating Businesses
	Type	Output
	Description	As stackable learning content develops during project progression, pilot with participating business. This result will be delivered by: P5
	Due date	M36
	Language(s)	English
	Media(s)	Electronic version published in media

Dissemination level	☒ Public ☐ Restricted to other programme participants (including Commission services and project reviewers) ☐ Confidential, only for members of the consortium (including EACEA and Commission services and project reviewers)

Expected result (output or outcome)	WP6	Create Career Frameworks
	Title	6.10 Ideation Pilots Conducted
	Type	Outcome
	Description	Ideation pilot workshops are an integral part of the learning content and focused on applying a structured ideation process for innovation discovery. Ideation workshops will help participating partners create ideas that can be followed by throughout the whole innovation diffusion process. Ideation workshops are part of the innovation ecosystem by providing innovative problem solving in all stages of the process. Structured ideation sees ideas as the starting point for an innovation. Depending on the trigger for creating ideas, different kinds of creativity techniques and tools can be used, e.g. classical creativity techniques, human centred approaches (e.g. Design Thinking) and systematic approaches (e.g. TRIZ). For business participants the aim is to discover new ideas in a workshop. For the project the aim of the activity is to validate all project findings to date in the contexts where innovation actually occurs. Particular emphasis is placed on enabling participants to use the integration simulation and relevant insights generated to date. The activity will conduct a workshop in each of the regions with participating business enterprises, whereby participation is opened to other interested parties in the project network and other business enterprises in the region where the effort is being conducted. The workshop will be hosted by an institute for higher education in the region. Each workshop will last for three days. The first day is focused on stage-setting and training. The second day will conduct a workshop using structured ideation techniques. The third day will debrief results from the second day, agree on next steps and provide input to final refinement of project results to date. Next steps will consider especially the degree to which discovered ideas can be monitored after the end of project using the developed solutions and toolsets. Training materials will be developed as part of the WP6. Specific sub-activities are: • 6.10.1 Create Design Guidelines for Structured Ideation Workshops. Create design guidelines for the Structured Ideation Workshops based on project learning to date. The design guidelines should provide clear instructions for preparing the workshops in the most effective manner considering such principles such as intuitiveness, learnability, efficiency, and consistency. The design guidelines should furthermore ensure high quality experimental innovation efforts. All WP members are to be trained in the design guidelines. • 6.10.2: Prepare Structured Ideation Workshops. Prepare three day workshops with a focus on structured ideation. Preparation will include a highly scripted play book, detailed agendas and collaboration with WP6 to develop appropriate training materials and templates. The first day is focused on stage-setting and training. The second day will conduct a structured ideation workshop focused on structured ideation. The third day will debrief results from the second day and agree on next steps. Preparation will furthermore include organizing an appropriate venue and marketing the event in the region to solicit further participants. • 6.10.3: Deliver Structured Ideation Workshops. Deliver three day workshops in regions based on the play book, agendas and training

		material developed in collaboration with WP6. Particular emphasis is to be placed on working with participants to (a) validate project deliverables to date (b) use the integrated simulation and idea design principles in their personal contexts and gain feedback to improve the user experience (c) translate the structured ideation results into high quality case studies for learning activities. • 6.10.4: Debrief Structured Ideation Workshops and Refresh Project Deliverables. After completion of workshops review all assets created and refresh all project deliverables as necessary. In particular any relevant change requests to the Integrated Simulation must be clearly defined and submitted to the simulation management team. • 6.10.5: Create Case Studies. Create case studies for each of the business enterprises that participated at the Structured Ideation Workshops. These case studies should be aligned with the business simulations created as part of WP8 and the needs analysis completed as part of WP9. • 6.10.6: Write Up Case Studies as Submission for Journal Publication. Write up case studies as a journal publication and submit to a relevant journal in top 10% of comparable journal impact factors. • 6.10.7: Contribute to WP6. Provide case studies in the form of business school case study formats to WP6. This result will be delivered by: P11
	Due date	M24
	Language(s)	English
	Media(s)	Electronic version published in media (Signed participant lists)
Dissemination level	☒ Public ☐ Restricted to other programme participants (including Commission services and project reviewers) ☐ Confidential, only for members of the consortium (including EACEA and Commission services and project reviewers)	

Expected result (output or outcome)	WP6	Create Career Frameworks
	Title	6.11 Ideation Pilot Idea Diffusion Tracked
	Type	Output
	Description)	After ideation pilots implement a process for tracking the diffusion of generated ideas using the simulation as a framework. Feed ongoing insights back to project partners to ensure continuously alignment of applied diffusion learnings with other activities. This result will be delivered by: P11
	Due date	M36
	Language(s)	English
	Media(s)	Electronic version published in media (Monthly progression reviews)
Dissemination level	☒ Public ☐ Restricted to other programme participants (including Commission services and project reviewers)	

	☐ Confidential, only for members of the consortium (including EACEA and Commission services and project reviewers)

Expected result (output or outcome)	WP6	Create Career Frameworks
	Title	6.12 Preparation of Erasmus Mundus Joint Masters Degree Program Application
	Type	Output
	Description	Prepared submission of the developed and piloted curriculum for approval as a joint-accredited Erasmus Mundus Joint Masters Degree program. The application will be endorsed by the consortium of higher education institutions participating in the project. Pending details on how this program will be included in the pending Horizon Europe program, the existing recommendations as part of the Erasmus Mundus Joint Masters Degree 2020 call will be used as guidance. This result will be delivered by: P11
	Due date	M36
	Language(s)	English
	Media(s)	Electronic version published in media
Dissemination level	☒ Public ☐ Restricted to other programme participants (including Commission services and project reviewers) ☐ Confidential, only for members of the consortium (including EACEA and Commission services and project reviewers)	

Expected result (output or outcome)	WP6	Create Career Frameworks
	Title	6.13 Policy Guidance
	Type	Output
	Description *(Recommended limit 1500 characters)*	Recommendations for improving policy at EU, national and regional levels in order to enable rapid diffusion of the curriculum and its continuous improvement to a wider range of countries, regions and institutions, including a wider spread of potential participants at all levels of qualification. This result will be delivered by: P5
	Due date	M36
	Language(s)	English
	Media(s)	Electronic version published in media
Dissemination level	☒ Public ☐ Restricted to other programme participants (including Commission services and project reviewers) ☐ Confidential, only for members of the consortium (including EACEA and Commission services and project reviewers)	

WP6 Explanation of Work Package expenditures

This WP requires a total of 771 working days distributed across all project partners in various roles with a total implementation cost of approximately €215,000 plus travel/subsistence costs of approximately €15,000. The costs of this WP represent approximately 25% of the total project budget.

VII.1.7. Work Package 7 – *Create Collaboration Community*

WP7 description

WP No.7	Create Collaboration Community
Work Package/Activity type	☐ Preparation ☐ Management ☒ Implementation (the substance of the work planned including production, testing, etc.) ☐ Quality Assurance (quality plan) ☐ Evaluation ☐ Dissemination and Exploitation of results
Title	Create Collaboration Community
Description	This implementation work package gathers, activates and facilitates the learning path and collaboration of the members of the organizations participating in the project in order to ensure high quality project delivery and effectiveness of the project efforts. The community will be provided with a technical infrastructure spanning a spectrum of digital collaboration tools and be pro-actively facilitated to develop and maintain the needed collaboration behaviours. Inspiration is found in current offerings such as https://ktn-uk.co.uk/perspectives/ktn-launches-innovative-new-website. The work package is supported by the overall project communications plan and also aspires to develop partially automated artificial intelligence supported facilitator avatars to support the work of community facilitators. This result will be delivered by: P6
Tasks	• 7.1: Create Digital Infrastructure. Identify digital collaboration tools most relevant to the project participants (i.e. Email, LinkedIn, Facebook, Skype, Slack, Twitter, Whatsapp, YouTube) to then select a suitable open source integration software which can be used as a single point of coordination, communication and content management. Implement integration tool and set-up all relevant communication channels, including the design and dissemination of a suitable mobile-desk top integrated application. • 7.2: Design Collaboration Plan. The collaboration plan is intended to nurture and encourage transparent collaboration (versus the consumption of communication content) among the project participants as they complete the project tasks. The collaboration plan is based on the project plan and focuses on the interactions of the relevant project participants to ensure the results are joint-outcomes. • 7.3: Implement Collaboration Plan. The implementation of the collaboration plan is dependent upon the role of the community facilitator who is required to pro-actively encourage collaboration, sharing of know-how, know-why and highlighting of good practice. The project names this role as a "web weaver" and the responsibility for the role will be distributed to the work package owners who will also be trained accordingly. • 7.4: Solve Challenges. The collaboration efforts of the community will be focused on solving specific project related challenges both in respect to the project results and in respect to the business challenges being addressed. Web weavers will be responsible for facilitating participation and the task is inspired by https://connect.innovateuk.org/web/uncertainty-quantification-and-management-in-high-value-manufacturing/use-cases.

WP No.7	Create Collaboration Community
	• 7.5: Monitor Collaboration. The dynamics and patterns of community collaboration within the digital infrastructure will be monitored using network analysis techniques in order to identify optimal interventions for increasing collaboration quality. • 7.6: Automate Web Weaver Role. Based on the learning from collaboration monitoring and intervention effects, a pilot avatar using simple artificial intelligence routines will be developed and implemented to (partially) automate the activities of web weavers.
Estimated start date	M1
Estimated end date	M36
Lead organisation	P6
Participating organisations	P1-P5, P7-P28

WP7 Results (outputs and outcomes)

Expected result (output or outcome)	WP7	Create Collaboration Community
	Title	7.1 Digital Collaboration Infrastructure Created
	Type	Output
	Description	Digital collaboration tools most relevant to the project participants identified (i.e. Email, LinkedIn, Facebook, Skype, Slack, Twitter, Whatsapp, YouTube) and suitable open source integration software which can be used as a single point of coordination, communication and content management selected. Implement integration tool and set-up all relevant communication channels, including the design and dissemination of a suitable mobile-desk top integrated applicatio This result will be delivered by: P6
	Due date	M3
	Language(s)	English
	Media(s)	Other (Digital collaboration infrastructure implemented on project server)
Dissemination level	☒ Public ☐ Restricted to other programme participants (including Commission services and project reviewers) ☐ Confidential, only for members of the consortium (including EACEA and Commission services and project reviewers)	

Expected result (output or outcome)	WP7	Create Collaboration Community
	Title	7.2 Collaboration Plan Designed
	Type	Output

	Description	The collaboration plan is intended to nurture and encourage transparent collaboration (versus the consumption of communication content) among the project participants as they complete the project tasks. The collaboration plan is based on the project plan and focuses on the interactions of the relevant project participants to ensure the results are joint-outcomes. This result will be delivered by: P6
	Due date	M3
	Language(s)	English
	Media(s)	Electronic version published in media
Dissemination level	☒ Public ☐ Restricted to other programme participants (including Commission services and project reviewers) ☐ Confidential, only for members of the consortium (including EACEA and Commission services and project reviewers)	

Expected result (output or outcome)	WP7	Create Collaboration Community
	Title	7.3 Collaboration Plan Implemented
	Type	Outcome
	Description	The implementation of the collaboration plan is dependent upon the role of the community facilitator who is required to pro-actively encourage collaboration, sharing of know-how, know-why and highlighting of good practice. The project names this role as a “web weaver” and the responsibility for the role will be distributed to the work package owners who will also be trained accordingly. This result will be delivered by: P6
	Due date	M6
	Language(s)	English
	Media(s)	Other (Ongoing implementation of digital collaboration plan with monthly reporting)
Dissemination level	☒ Public ☐ Restricted to other programme participants (including Commission services and project reviewers) ☐ Confidential, only for members of the consortium (including EACEA and Commission services and project reviewers)	

Expected result (output or outcome)	WP7	Create Collaboration Community
	Title	7.4 Solve Challenges
	Type	Output
	Description	The collaboration efforts of the community will be focused on solving specific project related challenges both in respect to the project results and in respect to the business challenges being addressed. Web weavers will be responsible for facilitating participation and the task is inspired by

		https://connect.innovateuk.org/web/uncertainty-quantification-and-management-in-high-value-manufacturing/use-cases. This result will be delivered by: P6
	Due date	M36
	Language(s)	English
	Media(s)	Electronic version published in media (Research challenge case study summaries)
Dissemination level	☒ Public ☐ Restricted to other programme participants (including Commission services and project reviewers) ☐ Confidential, only for members of the consortium (including EACEA and Commission services and project reviewers)	

Expected result (output or outcome)	WP7	Create Collaboration Community
	Title	7.5 Collaboration Monitored
	Type	M36
	Description	The dynamics and patterns of community collaboration within the digital infrastructure will be monitored using network analysis techniques in order to identify optimal interventions for increasing collaboration quality. This result will be delivered by: P6
	Due date	M36
	Language(s)	English
	Media(s)	Electronic version published in media (Monthly collaboration quality report)
Dissemination level	☒ Public ☐ Restricted to other programme participants (including Commission services and project reviewers) ☐ Confidential, only for members of the consortium (including EACEA and Commission services and project reviewers)	

Expected result (output or outcome)	WP7	Create Collaboration Community
	Title	7.6 Web Weaver Role (Partially) Automated
	Type	Output
	Description	Based on the learning from collaboration monitoring and intervention effects, a pilot avatar using simple artificial intelligence routines will be developed and implemented to (partially) automate the activities of web weavers. This result will be delivered by: P6
	Due date	M36
	Language(s)	English

	Media(s)	Other (Collaboration avatar pilot)
Dissemination level	☒ Public ☐ Restricted to other programme participants (including Commission services and project reviewers) ☐ Confidential, only for members of the consortium (including EACEA and Commission services and project reviewers)	

WP7 Explanation of Work Package expenditures

This WP requires a total of 390 working days distributed across all project partners in various roles with a total implementation cost of approximately €50,000. This WP requires no travel. The costs of this WP represent approximately 6% of the total project budget.

VII.1.8. Work Package 8 – *Create Simulation*

WP8 description

WP No.8	Create Simulation
Work Package/Activity type	☐ Preparation ☐ Management ☒ Implementation (the substance of the work planned including production, testing, etc.) ☐ Quality Assurance (quality plan) ☐ Evaluation ☐ Dissemination and Exploitation of results
Title	Create Simulation
Description	This implementation work package creates a simulation of the living (eco-) system that describes the diffusion of innovation from ideation through market saturation. The simulation consists of multiple layers: • a "value network" model based on behavioural roles and sequenced (in-) tangible exchanges between these. The primary inputs are a generic network describing the diffusion of innovation from ideation to market saturation derived from previous research and the single "success story" from each participating business created in face-to-face workshops. The below image illustrates a simple ideation value network (for further details see https://open-european-innovation-network.blogspot.com/2019/06/exploring-first-innovation-web-research.html, https://open-european-innovation-network.blogspot.com/2019/06/exploring-second-innovation-web.html, https://open-european-innovation-network.blogspot.com/2019/06/exploring-third-innovation-web-market.html and https://open-european-innovation-network.blogspot.com/2019/06/exploring-fourth-innovation-web.html. 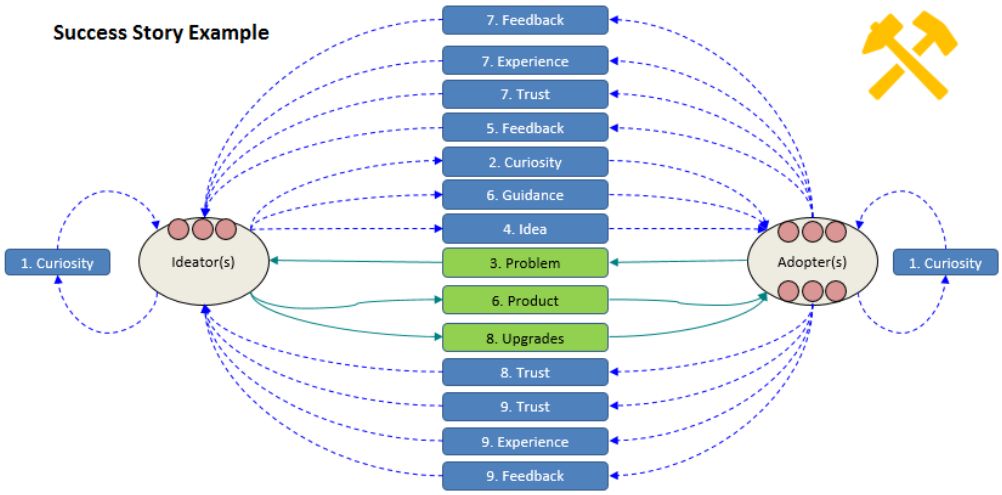 • a "process" model of the network model detailed to BPMN Version 2.0 (ISO/IEC 19510:2013). The below image illustrates a simple process view of the ideation value network.

WP No.8	Create Simulation

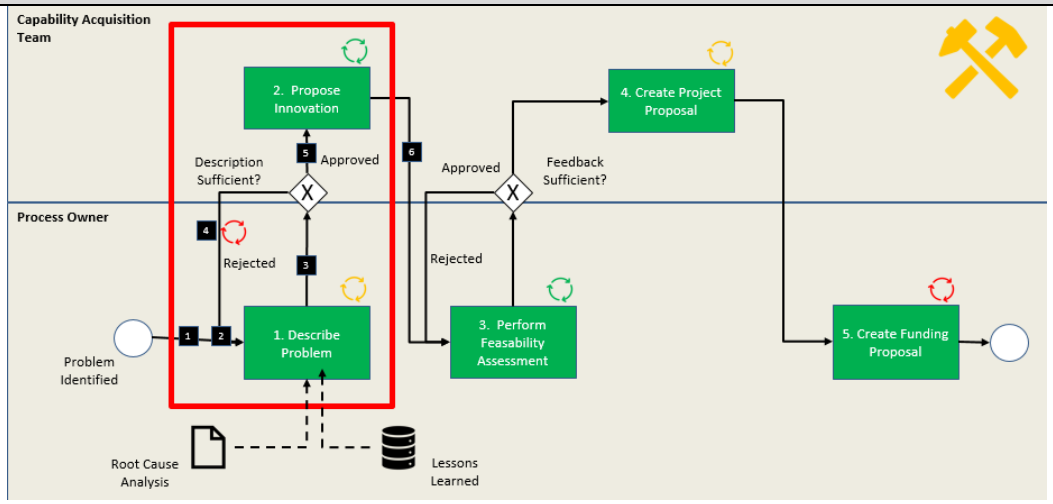

- a "simulation" of the interdependencies between key value and process network model variables. The initial variables for exploration are based on previous research efforts and will be adjusted as necessary. The below image illustrates a simple simulation of the diffusion of innovation life cycle.

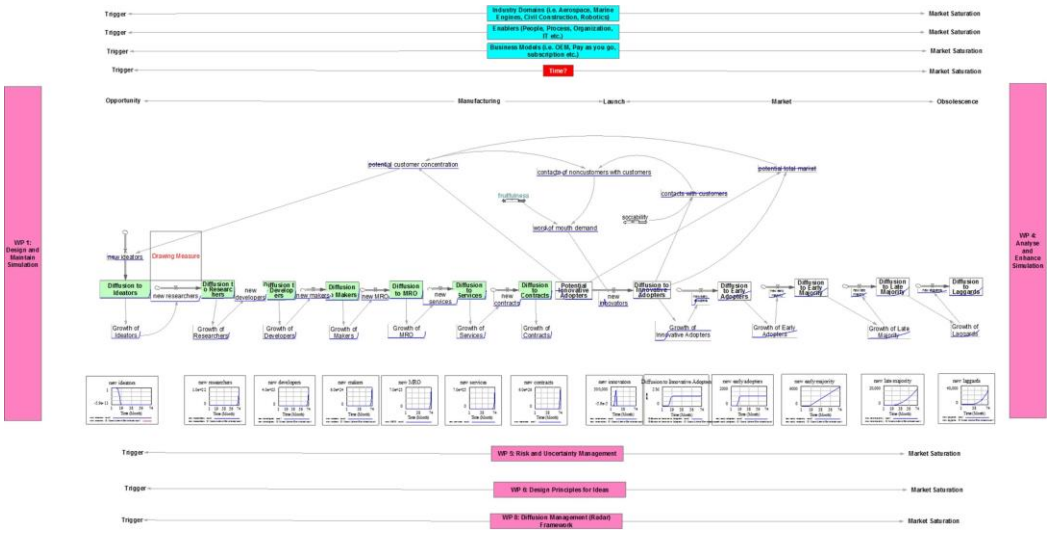

- a "value creation" model describing value creation in terms of intellectual capital reporting. The below image illustrates a simple template used for the intangible assets monitor.

WP No.8	Create Simulation

The Expanded Intangible Assets Monitor

	Tangible Assets	Intangible Assets						
		External structure <-> External structure	External structure <-> Internal structure	Individual competence <-> External structure	Internal structure <-> Internal structure	Internal structure <-> Individual competence	Individual competence <-> Individual competence	Our Mission
Growth (usually in absolute numbers)								
Importance	High	0,00%	0,00%	0,00%	0,00%	0,00%	0,00%	0,00%
Indicator	enter>	enter>	enter>	enter>	enter>	enter>	enter>	enter>
Importance	High	0,00%	0,00%	0,00%	0,00%	0,00%	0,00%	0,00%
Indicator	enter>	enter>	enter>	enter>	enter>	enter>	enter>	enter>
Renewal (i.e. "freshness")								
Importance	High	0,00%	0,00%	0,00%	0,00%	0,00%	0,00%	0,00%
Indicator	enter>	enter>	enter>	enter>	enter>	enter>	enter>	enter>
Importance	High	0,00%	0,00%	0,00%	0,00%	0,00%	0,00%	0,00%
Indicator	enter>	enter>	enter>	enter>	enter>	enter>	enter>	enter>
Efficiency (i.e. "usefulness")								
Importance	High	0,00%	0,00%	0,00%	0,00%	0,00%	0,00%	0,00%
Indicator	enter>	enter>	enter>	enter>	enter>	enter>	enter>	enter>
Importance	High	0,00%	0,00%	0,00%	0,00%	0,00%	0,00%	0,00%
Indicator	enter>	enter>	enter>	enter>	enter>	enter>	enter>	enter>
Stability/Risk (i.e. "satisfaction with")								
Importance	High	0,00%	0,00%	0,00%	0,00%	0,00%	0,00%	0,00%
Indicator	enter>	enter>	enter>	enter>	enter>	enter>	enter>	enter>
Importance	High	0,00%	0,00%	0,00%	0,00%	0,00%	0,00%	0,00%
Indicator	enter>	enter>	enter>	enter>	enter>	enter>	enter>	enter>

- a simple interactive dashboard and scenario / game playing capability.

All models will be integrated through a coherent mathematical model. All versions of the simulation will be subject to detailed change management through separate development, test and production versions. All deliverables will be accompanied by relevant data capture templates and user guides. Training materials will be developed as part of the WP6.

Tasks

- 8.1: Create Baseline Generic Simulation (Version 1.0). Create baseline "generic" simulation version 1.0 based on previous research. Includes supporting materials such as data capture templates, user guides, and a training course. The baseline simulation and all future versions will include all layers (value network, process, simulation, value creation and dashboard).
- 8.2: Create Business Specific Simulations. Create one "success story" simulation for each participating business using the generic simulation as a template. This will occur during regional events in one day face to face workshops business participants in that region.
- 8.3: Create Integrated Simulation (Version 2.0). Integrate business specific simulations with baseline generic simulation to create simulation version 2.0 with appropriate revision of supporting materials. Integration involves mapping the business specific simulation results from the previous task to the generic simulation version with relevant adjustments of such as needed.
- 8.4: Enable WP9. Enable WP9 to use simulation version 2.0 as the basis for the needs analysis. Enablement involves training work package participants and ensuring they are able to use the simulation in order to shape and complete their tasks and deliverables.
- 8.5: Enable WP10. Enable WP10 to use simulation version 2.0 as the basis for case study development.
- 8.6: Create Integrated Simulation (Version 3.0). Integrate the results of WP9 and WP10 with simulation version 2.0 to create simulation version 3.0 with appropriate revision of supporting materials.
- 8.7: Enable WP6. Enable WP6 to use simulation version 1.0 as the basis for starting to address the tasks in that work package. Enablement involves training work package participants (therefore for all enablement tasks the work package manager, the work package researcher and the supporting project members) and ensuring they are able to use the simulation in order to shape and complete their tasks and deliverables.
- 8.8: Enable WP11. Enable WP11 to use simulation version 3.0 as the basis for analysis of living (eco-) system performance variables (combination of).

WP No.8	Create Simulation
	• 8.9: Write Up Business Specific Simulations as Submission for Journal Publication. Write up business specific simulations as a journal publication and submit to a relevant journal in top 10% of comparable journal impact factors. • 8.10: Contribute to WP6. Provide a technical user guide and a practitioner user guide for the Integrated Simulation (Version 3.0) to WP6.
Estimated start date	M1
Estimated end date	M9
Lead organisation	P1
Participating organisations	P2-P28

WP8 Results (outputs and outcomes)

Expected result (output or outcome)	WP8	Create Simulation
	Title	8.1 Baseline Generic Simulation (Version 1.0)
	Type	Output
	Description	The baseline "generic" simulation version 1.0 is based on previous research and includes supporting materials such as data capture templates, user guides, and a training course. The baseline simulation and all future versions will include all layers (value network, process, simulation, value creation and dashboard). The value network layer will include modules for context analysis, stakeholder analysis, role definitions, scope definition, simple visualization, transaction capture, transaction sequencing, exchange analysis, value network analysis, performance indicator analysis, impact analysis, value creation analysis, perceived value analysis, and intellectual capital reporting. The process layer will include tasks, events, gateways, resources, markers in a swim-lane format. The simulation layer will include causal loop diagrams, stock and flow diagrams, equations, and the ability for continuous and discrete event simulation. The value creation model will describe the tangible and intangible value (internal, external and structural) created by the simulation under varying scenarios. The dashboard / gaming layer provides a simple to use intuitive interface for non-expert interrogation of the various layers, including the ability to test the impact of differing scenarios on such. This result will be delivered by: P1
	Due date	M3
	Language(s)	English
	Media(s)	Electronic version published in media (Excel based simulation)
Dissemination level	☒ Public ☐ Restricted to other programme participants (including Commission services and project reviewers)	

	☐ Confidential, only for members of the consortium (including EACEA and Commission services and project reviewers)

Expected result (output or outcome)	WP8	Create Simulation
	Title	8.2 Business Specific Simulations
	Type	Output
	Description	Simulations for stories describing successful innovations in each of the participating businesses across all layers based on the generic simulation as a template. The value network layer will be created during regional events in one day face to face workshops with business participants in that region. Collaboration with the business participants will be ad hoc to gather further information or to validate certain (parts of) layers. The process, simulation, value creation and dashboard layers will be created after the event and then validated in 1/2 day virtual workshops with the business participants. This result will be delivered by: P1
	Due date	M6
	Language(s)	English
	Media(s)	Electronic version published in media (Excel based simulation)
Dissemination level	☒ Public ☐ Restricted to other programme participants (including Commission services and project reviewers) ☐ Confidential, only for members of the consortium (including EACEA and Commission services and project reviewers)	

Expected result (output or outcome)	WP8	Create Simulation
	Title	8.3 Integrated Simulation (Version 2.0)
	Type	Output
	Description	The Integrated Simulation (Version 2.0) integrates the business specific simulations with the Baseline Generic Simulation (Version 1.0) with appropriate revision of all layers and supporting materials. Integration involves mapping all the individual business specific simulations created to the generic simulation version with relevant adjustments of such as needed. The mapping will be based on applying generic taxonomies used in the Baseline Generic Simulation (Version 1.0) whereby a quantitative assessment of the (forward and inverse) uncertainty thus injected for all layers will be completed and used for calibration purposes in order to remain with an uncertainty range estimated to be acceptable at +/- 10%. This result will be delivered by: P1
	Due date	M6
	Language(s)	English
	Media(s)	Electronic version published in media (Excel based simulation)

Dissemination level	☒ Public ☐ Restricted to other programme participants (including Commission services and project reviewers) ☐ Confidential, only for members of the consortium (including EACEA and Commission services and project reviewers)

Expected result (output or outcome)	WP8	Create Simulation
	Title	8.4 Enablement of WP9
	Type	Outcome
	Description	Through enablement of the owners, assigned researchers and supporting project members for WP9 these (and all other work packages) will be placed in a position to use the then most actual simulation version as the basis for starting to address the tasks in their work packages. Enablement will involve training relevant project members in depth using training materials developed by WP 6 including assurance of developed skills through appropriate assessment measures recommend by WP4. Enablement will furthermore involve advice and guidance on how best to apply the simulation within these work packages. Enablement will also contain ongoing support services in respect to operating the simulations and necessary change management to the simulation. This result will be delivered by: P1
	Due date	M6
	Language(s)	English
	Media(s)	Other (Signed training participation lists)
Dissemination level	☐ Public ☐ Restricted to other programme participants (including Commission services and project reviewers) ☒ Confidential, only for members of the consortium (including EACEA and Commission services and project reviewers)	

Expected result (output or outcome)	WP8	Create Simulation
	Title	8.5 Enablement of WP10
	Type	Outcome
	Description	Through enablement of the owners, assigned researchers and supporting project members for WP10 these (and all other work packages) will be placed in a position to use the then most actual simulation version as the basis for starting to address the tasks in their work packages. Enablement will involve training relevant project members in depth using training materials developed by WP 6 including assurance of developed skills through appropriate assessment measures recommend by WP4. Enablement will furthermore involve advice and guidance on how best to apply the simulation within these work packages. Enablement will also contain ongoing support services in respect to operating the simulations and necessary change management to the simulation. This result will be delivered by: P1
	Due date	M6

	Language(s)	English
	Media(s)	Other (Signed training participation lists)
Dissemination level	☐ Public ☐ Restricted to other programme participants (including Commission services and project reviewers) ☒ Confidential, only for members of the consortium (including EACEA and Commission services and project reviewers)	

Expected result (output or outcome)	WP8	Create Simulation
	Title	8.6 Integrated Simulation (Version 3.0)
	Type	Output
	Description	The Integrated Simulation (Version 3.0) integrates the results of WP9 and WP10 with the Integrated Simulation (Version 2.0) with appropriate revision of all layers and supporting materials. Integration involves mapping all the individual business specific simulations created to the generic simulation version with relevant adjustments of such as needed. The mapping will be based on applying generic taxonomies used in the Baseline Generic Simulation (Version 1.0) whereby a quantitative assessment of the (forward and inverse) uncertainty thus injected for all layers will be completed and used for calibration purposes in order to remain with an uncertainty range estimated to be acceptable at +/- 10%. This result will be delivered by: P1
	Due date	M9
	Language(s)	English
	Media(s)	Electronic version published in media (Excel based simulation)
Dissemination level	☒ Public ☐ Restricted to other programme participants (including Commission services and project reviewers) ☐ Confidential, only for members of the consortium (including EACEA and Commission services and project reviewers)	

Expected result (output or outcome)	WP8	Create Simulation
	Title	8.7 Enablement of WP6
	Type	Outcome
	Description	Through enablement of the owners, assigned researchers and supporting project members for WP6 these (and all other work packages) will be placed in a position to use the then most actual simulation version as the basis for starting to address the tasks in their work packages. Enablement will involve training relevant project members in depth using training materials developed by WP 6 including assurance of developed skills through appropriate assessment measures recommend by WP4. Enablement will furthermore involve advice and guidance on how best to apply the simulation within these work packages. Enablement will also contain ongoing support services in respect to operating the simulations and necessary change management to the simulation.

		This result will be delivered by: P1
	Due date	M6
	Language(s)	English
	Media(s)	Other (Signed training participation lists)
Dissemination level	☐ Public ☐ Restricted to other programme participants (including Commission services and project reviewers) ☒ Confidential, only for members of the consortium (including EACEA and Commission services and project reviewers)	

Expected result (output or outcome)	WP8	Create Simulation
	Title	8.8 Enablement of WP11
	Type	Outcome
	Description	Through enablement of the owners, assigned researchers and supporting project members for WP11 these (and all other work packages) will be placed in a position to use the then most actual simulation version as the basis for starting to address the tasks in their work packages. Enablement will involve training relevant project members in depth using training materials developed by WP 6 including assurance of developed skills through appropriate assessment measures recommend by WP4. Enablement will furthermore involve advice and guidance on how best to apply the simulation within these work packages. Enablement will also contain ongoing support services in respect to operating the simulations and necessary change management to the simulation. This result will be delivered by: P1
	Due date	M6
	Language(s)	English
	Media(s)	Other (Signed training participation lists)
Dissemination level	☐ Public ☐ Restricted to other programme participants (including Commission services and project reviewers) ☒ Confidential, only for members of the consortium (including EACEA and Commission services and project reviewers)	

Expected result (output or outcome)	WP8	Create Simulation
	Title	8.9 Write Up of Business Specific Simulations Submitted for Journal Publication
	Type	Output
	Description	Paper submitted to relevant journal. This result will be delivered by: P1.
	Due date	M7

	Language(s)	English
	Media(s)	Electronic version published in media
Dissemination level	☒ Public ☐ Restricted to other programme participants (including Commission services and project reviewers) ☐ Confidential, only for members of the consortium (including EACEA and Commission services and project reviewers)	

Expected result (output or outcome)	WP8	Create Simulation
	Title	8.10 Contribute to WP6
	Type	Output
	Description	A technical user guide and a practitioner user guide for the Integrated Simulation (Version 3.0) provided to WP6. This result will be delivered by: P1.
	Due date	M7
	Language(s)	English
	Media(s)	Electronic version published in media (Simulation materials for learning content creation)
Dissemination level	☐ Public ☐ Restricted to other programme participants (including Commission services and project reviewers) ☒ Confidential, only for members of the consortium (including EACEA and Commission services and project reviewers)	

WP8 Explanation of Work Package expenditures

This WP requires a total of 292 working days distributed across all project partners in various roles with a total implementation cost of approximately €65,000 plus travel/subsistence costs of approximately €16,000. The costs of this WP represent approximately 8% of the total project budget.

VII.1.9. Work Package 9 – *In-Depth Needs Analysis*

WP9 description

WP No.9	In-Depth Needs Analysis
Work Package/Activity type	☐ Preparation ☐ Management ☒ Implementation (the substance of the work planned including production, testing, etc.) ☐ Quality Assurance (quality plan) ☐ Evaluation ☐ Dissemination and Exploitation of results
Title	In-Depth Needs Analysis
Description	This implementation work package significantly deepens the needs analysis conducted for creating the proposal. The aim of the work package is to extend the initial needs analysis with further semi-structured surveys in combination with the Baseline Generic Simulation (Version 1.0) to a wider manufacturing target audience in the geographic regions of the project participants in order to further increase industry participation in the project. The work package will conduct a detailed scenario analysis followed by a statistical analysis and literature review to then create an exemplary case study case study demonstrating how the results of the project will support the value proposition of the project to industry, higher education and (regions of) the EU as a whole.
Tasks	• 9.1: Conduct In-Depth Semi-Structured Interviews. Prepare and conduct in-depth semi-structured interviews with business organizations participating in the project. • 9.2: Conduct Scenario Analysis. Based upon the semi-structured interviews conduct a scenario analysis (including needs and expectations of industries from which business organizations participating in the project stem, needs and expectations of direct target groups, available training courses etc.) based upon research efforts leading to the proposal. • 9.3: Conduct Literature Review. Based upon tasks completed conduct an in-depth literature review related to the speed of innovation diffusion in manufacturing (including relevant policy perspectives). • 9.4: Conduct Statistical Analysis. Based upon the scenario analysis, conduct a statistical analysis (including sector's occupancy rate, number of people who attend relevant courses, number of attendants employed after obtaining the course certificate, number of relevant business organizations in partners countries). • 9.5: Create Case Study. Based upon tasks completed create one high level case study demonstrating how the results of the needs analysis support the value proposition of the project to industry, higher education and (regions of) the EU as a whole. • 9.6: Conduct Extended Semi-Structured Interviews. Based upon tasks completed extend the semi-structured interviews to further business organizations on a regional basis in order to solicit further insights and their participation in the regional events associated with WP10. • 9.7: Enable Upcoming WPs. Provide input to upcoming WPs to ensure maximum consideration of learnings. • 9.8: Global Comparison. Conduct comparative global research study as orientation for project efforts to ensure creation of relevant competitive advantage.

WP No.9	In-Depth Needs Analysis
	• 9.9: Write Up Case Study as Submission for Journal Publication. Write up case study as a journal publication and submit to a relevant journal in top 10% of comparable journal impact factors. • 9.10: Contribute to WP6. Provide case study write up in the form of a business school case study to WP6.
Estimated start date	M4
Estimated end date	M10
Lead organisation	P7
Participating organisations	P1-P6, P8-P28

WP7 Results (outputs and outcomes)

Expected result (output or outcome)	WP9	In-Depth Needs Analysis
	Title	9.1 In-Depth Semi-Structured Interviews
	Type	Output
	Description	An in-depth semi-structured interview and results of conducting these with business organizations participating in the project. The interview will be made available on-line and continuously serve to extend the research and solicit further participating organizations during the project. This result will be delivered by: P7
	Due date	M6
	Language(s)	English
	Media(s)	Electronic version published in media (Interview summary reports)
Dissemination level	☐ Public ☐ Restricted to other programme participants (including Commission services and project reviewers) ☒ Confidential, only for members of the consortium (including EACEA and Commission services and project reviewers)	

Expected result (output or outcome)	WP9	In-Depth Needs Analysis
	Title	9.2 Conduct Scenario Analysis
	Type	Output
	Description	A scenario analysis (including needs and expectations of industries from which business organizations participating in the project stem, needs and expectations of direct target groups, available training courses etc.) which will serve as a key input to the business cases and ensure that the project efforts are focused on the specific benefits needed in order to accelerate the speed of diffusion of innovation

		in the high value manufacturing industries represented by the participating business organizations. This result will be delivered by: P7
	Due date	M6
	Language(s)	English
	Media(s)	Electronic version published in media
Dissemination level	☒ Public ☐ Restricted to other programme participants (including Commission services and project reviewers) ☐ Confidential, only for members of the consortium (including EACEA and Commission services and project reviewers)	

Expected result (output or outcome)	WP9	In-Depth Needs Analysis
	Title	9.3 Literature Review
	Type	Output
	Description	An in-depth literature review related to the speed of innovation diffusion in manufacturing (including relevant policy perspectives) as input to the Baseline Generic Simulation (Version 1.0). The literature review will provide insights regarding historical developments, contemporary activities and future perspectives in alignment with the project aspiration. This result will be delivered by: P7
	Due date	M6
	Language(s)	English
	Media(s)	Electronic version published in media
Dissemination level	☒ Public ☐ Restricted to other programme participants (including Commission services and project reviewers) ☐ Confidential, only for members of the consortium (including EACEA and Commission services and project reviewers)	

Expected result (output or outcome)	WP9	In-Depth Needs Analysis
	Title	9.4 Statistical Analysis
	Type	Output
	Description	A statistical analysis (including sector's occupancy rate, number of people who attend relevant courses, number of attendants employed after obtaining the course certificate, number of relevant business organizations in partners countries) which will serve as a key input to the curriculum and training materials development to ensure an optimal focus thereof. This result will be delivered by: P7
	Due date	M6

	Language(s)	English
	Media(s)	Electronic version published in media
Dissemination level	☒ Public ☐ Restricted to other programme participants (including Commission services and project reviewers) ☐ Confidential, only for members of the consortium (including EACEA and Commission services and project reviewers)	

Expected result (output or outcome)	WP9	In-Depth Needs Analysis
	Title	9.5 Case Study
	Type	Output
	Description	One high level case study demonstrating how the results of the needs analysis support the value proposition of the project to industry, higher education and (regions of) the EU as a whole. This result will be delivered by: P7
	Due date	M7
	Language(s)	English
	Media(s)	Text document
Dissemination level	☒ Public ☐ Restricted to other programme participants (including Commission services and project reviewers) ☐ Confidential, only for members of the consortium (including EACEA and Commission services and project reviewers)	

Expected result (output or outcome)	WP9	In-Depth Needs Analysis
	Title	9.6 Extended Semi-Structured Interviews
	Type	Output
	Description	Extended semi-structured interviews to further business organizations on a regional basis in order to solicit further insights and their participation in the regional events associated with WP10. This result will be delivered by: P7
	Due date	M8
	Language(s)	English
	Media(s)	Electronic version published in media (Interview summary reports)
Dissemination level	☒ Public ☐ Restricted to other programme participants (including Commission services and project reviewers)	

	☐ Confidential, only for members of the consortium (including EACEA and Commission services and project reviewers)

Expected result (output or outcome)	WP9	In-Depth Needs Analysis
	Title	9.7 Upcoming Work Packages Enabled
	Type	Outcome
	Description	Enablement of upcoming work packages to ensure maximum consideration of learnings. This result will be delivered by: P7
	Due date	M8
	Language(s)	English
	Media(s)	Electronic version published in media (Signed training participation lists)
Dissemination level	☒ Public ☐ Restricted to other programme participants (including Commission services and project reviewers) ☐ Confidential, only for members of the consortium (including EACEA and Commission services and project reviewers)	

Expected result (output or outcome)	WP9	In-Depth Needs Analysis
	Title	9.8 Global Comparison
	Type	Output
	Description	Comparative global research study as orientation for project efforts to ensure creation of relevant competitive advantage. This result will be delivered by: P25
	Due date	M9
	Language(s)	English
	Media(s)	Electronic version published in media
Dissemination level	☒ Public ☐ Restricted to other programme participants (including Commission services and project reviewers) ☐ Confidential, only for members of the consortium (including EACEA and Commission services and project reviewers)	

Expected result (output or outcome)	WP9	In-Depth Needs Analysis
	Title	Case Study Submitted for Journal Publication
	Type	Output
	Description	Paper submitted to relevant journal.

		This result will be delivered by: P7
	Due date	M10
	Language(s)	English
	Media(s)	Electronic version published in media
Dissemination level	☒ Public ☐ Restricted to other programme participants (including Commission services and project reviewers) ☐ Confidential, only for members of the consortium (including EACEA and Commission services and project reviewers)	

Expected result (output or outcome)	WP9	In-Depth Needs Analysis
	Title	9.10 Contribute to WP6
	Type	Output
	Description	Provide case study write up in the form of a business school case study to WP6. This result will be delivered by: P7
	Due date	M9
	Language(s)	English
	Media(s)	Electronic version published in media (Signed training participation lists)
Dissemination level	☒ Public ☐ Restricted to other programme participants (including Commission services and project reviewers) ☒ Confidential, only for members of the consortium (including EACEA and Commission services and project reviewers)	

WP9 Explanation of Work Package expenditures

This WP requires a total of 238 working days distributed across all project partners in various roles with a total implementation cost of approximately €28,000 plus approximately €20,000 for the global comparison activity to be performed by P25. Travel costs are approximately €1,500. The costs of this WP represent approximately 6% of the total project budget.

VII.1.10. Work Package 10 – *Create Case Studies*

WP10 description

WP No.10	Create Case Studies
Work Package/Activity type	☐ Preparation ☐ Management ☒ Implementation (the substance of the work planned including production, testing, etc.) ☐ Quality Assurance (quality plan) ☐ Evaluation ☐ Dissemination and Exploitation of results
Title	Create Case Studies
Description	This implementation work package focuses on collaborating with business enterprises participating in the project to create in-depth business case studies through workshops based on the previously created business specific simulations, the most current version of the Integrated Simulation available and the needs analysis conducted in work package 2. The aim of the work package is to validate project findings sufficiently to enable a robust design phase in year 2. High quality "field" case studies will be enhanced versions of the business simulations and also serve as foundational training material to be developed as part of WP6. The work package will conduct a workshop in each of the regions with participating business enterprises, whereby participation is opened to other interested parties in the project network and other business enterprises in the region where the effort is being conducted. The workshops will be hosted by an institute for higher education in the region. Each workshop will last for three days. The first day is focused on stage-setting and training. The second day will conduct a Workshop to develop the basis for in-depth case studies. The third day will debrief results from the second day and agree on next steps. Training materials will be developed as part of WP6.
Tasks	• 10.1: Create Design Guidelines for Workshops. Create design guidelines for the workshops based on project learning to date. The design guidelines should provide clear instructions for preparing the Workshops in the most effective manner considering such principles such as intuitiveness, learnability, efficiency, and consistency. The design guidelines should furthermore ensure the creation of high quality case studies. All work package members are to be trained in the design guidelines. • 10.2: Prepare Workshops. Prepare three day workshops with a focus on case study creation. Preparation will include a highly scripted play book, detailed agendas and collaboration with WP6 to develop appropriate training materials and templates. The first day is focused on stage-setting and training. The second day will conduct a workshop to develop the basis for in-depth case studies. The third day will debrief results from the second day and agree on next steps. Preparation will furthermore include organizing an appropriate venue and marketing the event in the region to solicit further participants. • 10.3: Deliver Workshops. Deliver three day workshops in regions based on the play book, agendas and training material developed in collaboration with WP6. Particular emphasis is to be placed on working with participants to (a) validate the previously created business simulations (b) use the integrated simulation in their personal contexts and gain feedback to improve the user experience (c) translate the business simulations into high quality case studies for learning activities.

WP No.10	Create Case Studies
	• 10.4: Simulations Refreshed. After completion of Workshops review all assets created and refresh all project deliverables as necessary. In particular any relevant change requests to the Integrated Simulation must be clearly defined and submitted to the simulation management team. • 10.5: Create Case Studies. Create case studies for each of the business enterprises that participated at the Workshops. These case studies should be aligned with the business simulations created as part of WP8 and the needs analysis completed as part of WP9. • 10.6: Feedback to WP8 and WP9. Provide input for finalizing WP8 and WP9. • 10.7: Write Up Case Studies as Submission for Journal Publication. Write up case studies as a journal publication and submit to a relevant journal in top 10% of comparable journal impact factors. • 10.8: Contribute to WP6. Provide case study write up in the form of a business school case study to WP6.
Estimated start date	M7
Estimated end date	M12
Lead organisation	P4
Participating organisations	P1-P3, P5-P28

WP10 Results (outputs and outcomes)

Expected result (output or outcome)	WP10	Create Case Studies
	Title	10.1 Design Guidelines for Business Workshops
	Type	Output
	Description	Design guidelines for the Workshops providing clear instructions for preparing the Workshops in the most effective manner considering such principles such as intuitiveness, learnability, efficiency, and consistency. The design guidelines will establish the success criteria for events with multi-disciplinary co-creation, exploration, experimentation and evaluation of the case studies using the Integrated Simulation and insights gained during the needs analysis. This result will be delivered by: P4
	Due date	M7
	Language(s)	English
	Media(s)	Electronic version published in media
Dissemination level	☒ Public ☐ Restricted to other programme participants (including Commission services and project reviewers) ☐ Confidential, only for members of the consortium (including EACEA and Commission services and project reviewers)	

Expected result (output or outcome)	WP10	Create Case Studies
	Title	10.2 Business Workshops Prepared
	Type	Output
	Description	Prepare three day Workshops with a focus on case study creation. Preparation will include a highly scripted play book, detailed agendas and collaboration with WP6 to develop appropriate training materials and templates. The first day is focused on stage-setting and training. The second day will conduct a Workshop to develop the basis for in-depth case studies. The third day will debrief results from the second day and agree on next steps. Preparation will furthermore include organizing an appropriate venue and marketing the event in the region to solicit further participants. This result will be delivered by: P4
	Due date	M7
	Language(s)	English
	Media(s)	Electronic version published in media
Dissemination level	☒ Public ☐ Restricted to other programme participants (including Commission services and project reviewers) ☐ Confidential, only for members of the consortium (including EACEA and Commission services and project reviewers)	

Expected result (output or outcome)	WP10	Create Case Studies
	Title	10.3 Business Workshops Delivered
	Type	Outcome
	Description	Deliver three day workshops in regions based on the play book, agendas and training material developed in collaboration with WP6. Particular emphasis is to be placed on working with participants to (a) validate the previously created business simulations (b) use the integrated simulation in their personal contexts and gain feedback to improve the user experience (c) translate the business simulations into high quality case studies for learning activities. This result will be delivered by: P4
	Due date	M10
	Language(s)	English
	Media(s)	Electronic version published in media (Signed training participation lists)
Dissemination level	☒ Public ☐ Restricted to other programme participants (including Commission services and project reviewers) ☐ Confidential, only for members of the consortium (including EACEA and Commission services and project reviewers)	

	WP10	Create Case Studies

Expected result (output or outcome)	Title	10.4 Simulations Refreshed
	Type	Outcome
	Description	After completion of Workshops review all assets created and refresh all project deliverables as necessary. In particular any relevant change requests to the Integrated Simulation must be clearly defined and submitted to the simulation management team. This result will be delivered by: P4
	Due date	M10
	Language(s)	English
	Media(s)	Electronic version published in media
Dissemination level	☒ Public ☐ Restricted to other programme participants (including Commission services and project reviewers) ☐ Confidential, only for members of the consortium (including EACEA and Commission services and project reviewers)	

Expected result (output or outcome)	WP10	Create Case Studies
	Title	10.5 Business Case Studies Created
	Type	Output
	Description	Case studies for each of the business enterprises that participated at the Workshops are created and aligned with the business simulations created as part of WP8 and the needs analysis completed as part of WP9. Case studies are provided to WP6 in order to embed such in the training materials. This result will be delivered by: P4
	Due date	M11
	Language(s)	English
	Media(s)	Electronic version published in media
Dissemination level	☒ Public ☐ Restricted to other programme participants (including Commission services and project reviewers) ☐ Confidential, only for members of the consortium (including EACEA and Commission services and project reviewers)	

Expected result (output or outcome)	WP10	Create Case Studies
	Title	10.6 Feedback to WP8 and WP9 Provided
	Type	Output
	Description	Feedback for finalizing WP8 and WP9 provided. This result will be delivered by: P4

		This result will be delivered by: P4
	Due date	M11
	Language(s)	English
	Media(s)	Electronic version published in media (Signed training participation lists)
Dissemination level	☐ Public ☐ Restricted to other programme participants (including Commission services and project reviewers) ☒ Confidential, only for members of the consortium (including EACEA and Commission services and project reviewers)	

Expected result (output or outcome)	WP10	Create Case Studies
	Title	10.7 Write Up of Case Studies Submitted for Journal Publication
	Type	Output
	Description	Paper submitted to relevant journal. This result will be delivered by: P4
	Due date	M12
	Language(s)	English
	Media(s)	Electronic version published in media
Dissemination level	☒ Public ☐ Restricted to other programme participants (including Commission services and project reviewers) ☐ Confidential, only for members of the consortium (including EACEA and Commission services and project reviewers)	

Expected result (output or outcome)	WP10	Create Case Studies
	Title	10.8 Contribute to WP6
	Type	Output
	Description	Case study write up provided in the form of a business school case study to WP6. This result will be delivered by: P4
	Due date	M12
	Language(s)	English
	Media(s)	Electronic version published in media (Signed training participation lists)
Dissemination level	☐ Public ☐ Restricted to other programme participants (including Commission services and project reviewers)	

	☒ Confidential, only for members of the consortium (including EACEA and Commission services and project reviewers)

WP10 Explanation of Work Package expenditures

This WP requires a total of 186 working days distributed across all project partners in various roles with a total implementation cost of approximately €38,000 plus travel/subsistence costs of approximately €6,000. The costs of this WP represent approximately 4% of the total project budget.

VII.1.11. Work Package 11 – *Identify Variables and Game Changers*

WP11 description

WP No.11	Identify Variables and Game Changers
Work Package/Activity type	☐ Preparation ☐ Management ☒ Implementation (the substance of the work planned including production, testing, etc.) ☐ Quality Assurance (quality plan) ☐ Evaluation ☐ Dissemination and Exploitation of results
Title	Identify Variables and Game Changers
Description	This implementation work package conducts the in-depth analysis and evaluation of Integrated Simulation (Version 3.0) in order to identify the (in-) dependent variables (including tipping points) of relevance and game changers for disruptively accelerating innovation diffusion systems from ideation to market saturation. The concept of state space and dynamic space pictures will be applied and then extended to the relevant unity / translation space picture for invariant and variable attributes of the mathematically complete simulation model. The aim of the work package is to determine the interdependence of the variables from the objectives of disruptively accelerating the diffusion of innovations through the whole product life cycle, including what actionable changes can lead to such effects. Results achieved will be validated against the previously generated business specific simulations and the stakeholders involved in creating these. Scenarios will initially be drawn from the digital principles of Industry 4.0 (i.e. interconnection, information transparency, technical assistance and decentralized decision making), organizational principles (i.e. spatial and temporal synchronicity of collaboration in globally distributed teams, design thinking, cultures and behaviour), living systems principles (i.e. trophic cascading) and those that evolve from the interconnectedness of these principles.
Tasks	• 11.1: Determine Co-Variance of Simulation Layer Variables. Validate key (in-) dependent variables of value network, process, simulation, value creation and dashboard and determine their (grouped) co-variance at individual layer and layer aggregations. Rank co-variance and generate relationship model which permits for scenario simulations and game playing. Determine state space, dynamic space and unity space (in-) dependent variables and differentiate between those to be held constant and those opened for variance. • 11.2: Design Idea for Experimentation. Design a single generic idea to be used for performance evaluation of the Integrated Simulation (Version 3.0). • 11.3: Develop Key Digital Change Scenarios. Scenarios will be developed based on the digital principles of Industry 4.0, organizational principles, living systems principles and those that evolve from the interconnectedness of these principles. • 11.4: Evaluate State Space Performance. Evaluate performance of the Integrated Simulation (Version 3.0) using determined state space variables for key digital change scenarios. • 11.5: Evaluate Dynamics Space Performance. Evaluate performance of the Integrated Simulation (Version 3.0) using determined dynamic space variables for key digital change scenarios.

WP No.11	Identify Variables and Game Changers
	• 11.6: Identify Unity Space Characteristics. Evaluate performance of the Integrated Simulation (Version 3.0) using determined unity space variables for key digital change scenarios. • 11.7: Identify Tipping Points. Evaluate overall performance of the Integrated Simulation (Version 3.0) using the generic idea in order to identify constellations of (in-) dependent variables across the state, unity and dynamic space which result in step-change acceleration of the diffusion of innovation(s). Includes relevant business workshops. • 11.8: Enable WP12 and WP13. Enable WP12 and WP13 to use Integrated Simulation (Version 3.0) with identified dynamics as the basis for creating the risk and uncertainty reduction framework and creating design principles for ideas. • 11.9: Write Up Variables and Game Changers as Submission for Journal Publication. Write up variables and game changers as a journal publication and submit to a relevant journal in top 10% of comparable journal impact factors. • 11.10: Contribute to WP6. Write up variables and game changers as learning scenarios to WP6.
Estimated start date	M13
Estimated end date	M18
Lead organisation	P8
Participating organisations	P1-P7, P9-P28

WP11 Results (outputs and outcomes)

Expected result (output or outcome)	WP11	Identify Variables and Game Changers
	Title	11.1 Co-Variance of Simulation Layer Variables Determined
	Type	Output
	Description	Validate key (in-) dependent variables of value network, process, simulation, value creation and dashboard and determine their (grouped) co-variance at individual layer and layer aggregations. Rank co-variance and generate relationship model which permits for scenario simulations and game playing. Determine state space, dynamic space and unity space (in-) dependent variables and differentiate between those to be held constant and those opened for variance. This result will be delivered by: P8
	Due date	M13
	Language(s)	English
	Media(s)	Electronic version published in media
Dissemination level	☒ Public ☐ Restricted to other programme participants (including Commission services and project reviewers)	

	☐ Confidential, only for members of the consortium (including EACEA and Commission services and project reviewers)

Expected result (output or outcome)	WP11	Identify Variables and Game Changers
	Title	11.2 Idea for Experimentation Designed
	Type	Output
	Description	Design a single generic idea to be used for performance evaluation of the Integrated Simulation (Version 3.0). This result will be delivered by: P8
	Due date	M13
	Language(s)	English
	Media(s)	Electronic version published in media
Dissemination level	☒ Public ☐ Restricted to other programme participants (including Commission services and project reviewers) ☐ Confidential, only for members of the consortium (including EACEA and Commission services and project reviewers)	

Expected result (output or outcome)	WP11	Identify Variables and Game Changers
	Title	11.3 Key Digital Change Scenarios Developed
	Type	Output
	Description	Scenarios developed based on the digital principles of Industry 4.0, organizational principles, living systems principles and those that evolve from the interconnectedness of these principles. This result will be delivered by: P8
	Due date	M14
	Language(s)	English
	Media(s)	Electronic version published in media
Dissemination level	☒ Public ☐ Restricted to other programme participants (including Commission services and project reviewers) ☐ Confidential, only for members of the consortium (including EACEA and Commission services and project reviewers)	

Expected result (output or outcome)	WP11	Identify Variables and Game Changers
	Title	11.4 State Space Performance Evaluated
	Type	Output

	Description	Performance of the Integrated Simulation (Version 3.0) using determined state space variables for key digital change scenarios evaluated. This result will be delivered by: P8
	Due date	M14
	Language(s)	English
	Media(s)	Electronic version published in media
Dissemination level	☒ Public ☐ Restricted to other programme participants (including Commission services and project reviewers) ☐ Confidential, only for members of the consortium (including EACEA and Commission services and project reviewers)	

Expected result (output or outcome)	WP11	Identify Variables and Game Changers
	Title	11.5 Dynamics Space Performance Evaluated
	Type	Output
	Description	Performance of the Integrated Simulation (Version 3.0) using determined dynamic space variables for key digital change scenarios evaluated. This result will be delivered by: P8
	Due date	M15
	Language(s)	English
	Media(s)	Electronic version published in media
Dissemination level	☒ Public ☐ Restricted to other programme participants (including Commission services and project reviewers) ☐ Confidential, only for members of the consortium (including EACEA and Commission services and project reviewers)	

Expected result (output or outcome)	WP11	Identify Variables and Game Changers
	Title	11.6 Unity Space Characteristics Evaluated
	Type	Output
	Description	Overall performance of the Integrated Simulation (Version 3.0) using the generic idea in order to identify constellations of (in-) dependent variables across the state, unity and dynamic space which result in step-change acceleration of the diffusion of innovation(s) evaluated. This result will be delivered by: P8
	Due date	M16
	Language(s)	English

	Media(s)	Electronic version published in media
Dissemination level	☒ Public ☐ Restricted to other programme participants (including Commission services and project reviewers) ☐ Confidential, only for members of the consortium (including EACEA and Commission services and project reviewers)	

Expected result (output or outcome)	WP11	Identify Variables and Game Changers
	Title	11.7 OUTPUT: Tipping Points (incl. Business Workshops)
	Type	Output
	Description	Overall performance of the Integrated Simulation (Version 3.0) evaluated using the generic idea in order to identify constellations of (in-) dependent variables across the state, unity and dynamic space which result in step-change acceleration of the diffusion of innovation(s). Includes relevant business workshops. This result will be delivered by: P8
	Due date	M16
	Language(s)	English
	Media(s)	Electronic version published in media (Signed training participation lists)
Dissemination level	☒ Public ☐ Restricted to other programme participants (including Commission services and project reviewers) ☐ Confidential, only for members of the consortium (including EACEA and Commission services and project reviewers)	

Expected result (output or outcome)	WP11	Identify Variables and Game Changers
	Title	11.8 WP12 and WP13 Enabled
	Type	Output
	Description	WP12 and WP13 enabled to use Integrated Simulation (Version 3.0) with identified dynamics as the basis for creating the risk and uncertainty reduction framework and creating design principles for ideas. This result will be delivered by: P8
	Due date	M18
	Language(s)	English
	Media(s)	Electronic version published in media (Signed training participation lists)
Dissemination level	☐ Public ☐ Restricted to other programme participants (including Commission services and project reviewers)	

	☒ Confidential, only for members of the consortium (including EACEA and Commission services and project reviewers)

Expected result (output or outcome)	WP11	Identify Variables and Game Changers
	Title	11.9 Variables and Game Changers Submitted for Journal Publication
	Type	Output
	Description	Paper submitted to relevant journal. This result will be delivered by: P8
	Due date	M18
	Language(s)	English
	Media(s)	Electronic version published in media
Dissemination level	☒ Public ☐ Restricted to other programme participants (including Commission services and project reviewers) ☐ Confidential, only for members of the consortium (including EACEA and Commission services and project reviewers)	

Expected result (output or outcome)	WP11	Identify Variables and Game Changers
	Title	11.10 Contribute to WP6
	Type	Output
	Description	Variables and game changers provided as learning scenarios to WP6. This result will be delivered by: P8
	Due date	M18
	Language(s)	English
	Media(s)	Electronic version published in media (Signed training participation lists)
Dissemination level	☐ Public ☐ Restricted to other programme participants (including Commission services and project reviewers) ☒ Confidential, only for members of the consortium (including EACEA and Commission services and project reviewers)	

WP11 Explanation of Work Package expenditures

This WP requires a total of 348 working days distributed across all project partners in various roles with a total implementation cost of approximately €74,000 plus travel/subsistence of approximately €9,000. The costs of this WP represent approximately 9% of the total project budget.

VII.1.12. Work Package 12 – *Create Risk and Uncertainty Reduction Framework*

WP12 description

WP No.12	Create Risk and Uncertainty Reduction Framework
Work Package/Activity type	☐ Preparation ☐ Management ☒ Implementation (the substance of the work planned including production, testing, etc.) ☐ Quality Assurance (quality plan) ☐ Evaluation ☐ Dissemination and Exploitation of results
Title	Create Risk and Uncertainty Reduction Framework
Description	This implementation work package creates a risk and uncertainty assessment framework suited for assessing the uncertainty range (maturity levels) for (financial and intellectual capital) value creation of innovation diffusion estimates generated by scenarios defined as most relevant for the Integrated Simulation (Version 3.0) in WP11. The framework will consist of relevant interrogation questions for assessment, rank relevant risk threats and opportunities, and indicate improvement activities, as well as guidelines for the uncertainty ranges associated with these. The risk and uncertainty reduction framework will support organizations not only in increasing the probability of innovations progressing from ideation through market saturation by identifying and implementing suitable interventions as derived from results generated by the Integrated Simulation (Version 3.0), but also help ensure that the estimated (financial and intellectual capital) value creation occurs. This is the last work package focusing on the attributes of the innovation SYSTEM which ideas flow through and sets the foundation for WP13 where the focus moves to individual (clusters of) ideas passing through that system.
Tasks	• 12.1: Define Uncertainty Quantification Model. Conduct a literature research on forward, inverse and hybrid uncertainty quantification approaches applicable to the diffusion of innovations from ideation through market saturation and define the uncertainty quantification model to be used for assessing the ability of the innovation system(s) to be accelerated. • 12.2: Refine Framework Scenarios and Risks. Conduct an analysis regarding influencers of innovation system simulation based on political, economic, social, technological, environmental and legal (policy) factors (PESTLE). Refine the simulation scenarios accordingly and revise outputs of WP11 accordingly to then determine key risk threats and opportunities of relevance. • 12.3: Develop Scoring Scheme. Develop a generic scoring scheme for assessing the risk threat and opportunity probabilities and impacts (includes definition of relevant assessment variables and ranges) as related to the previously identified key risks threats and opportunities of relevance. • 12.4: Develop Maturity Assessment Technique. Develop a technique to assess simulation maturity against key risk threats and opportunities. The maturity will be assessed against the impact of the key risk threats and opportunities on the key variables influencing the ability of the innovation system(s) to be accelerated. • 12.5: Develop Intervention (Selection) Technique. Develop a set of standard interventions to increase simulation maturity levels and a technique for selecting

WP No.12	Create Risk and Uncertainty Reduction Framework
	the more effective and actionable depending on various business conditions (i.e. funding constraints). • 12.6: Create Risk Visualization Method. Create an approach for visualizing risk and uncertainty progression (including impact of treatment). • 12.7: Create Baseline Integrated Risk and Uncertainty Framework (Version 1.0). Integrate the uncertainty quantification model, the framework scenarios, the scoring scheme, the maturity assessment technique, the intervention (selection) technique and the risk visualization method to create a baseline risk and uncertainty framework (Version 1.0). • 12.8: Validate Framework with Business (Simulations). Apply the risk and uncertainty framework to the generated business simulations and validate the outputs / insights generated with the business organizations participating in the project. • 12.9: Create Integrated Risk and Uncertainty Framework (Version 2.0). Revise the baseline integrated risk and uncertainty framework (Version 1.0) based on the assessment of the business simulations and relevant feedback received. • 12.10: Enable WP13. Develop guidance for WP13. • 12.11: Create Integrated Risk and Uncertainty Framework (Version 3.0) – Analogy and Expert Opinion. Revise the integrated risk and uncertainty framework (Version 2.0) based on the results of WP11. • 12.12: Write Up Integrated Risk and Uncertainty Framework as Submission for Journal Publication. Write up integrated risk and uncertainty framework as a journal publication and submit to a relevant journal in top 10% of comparable journal impact factors. • 12.13: Contribute to WP6. Provide a technical user guide and a practitioner user guide to WP6.
Estimated start date	M16
Estimated end date	M21
Lead organisation	P2
Participating organisations	P1, P3-P28

WP12 Results (outputs and outcomes)

Expected result (output or outcome)	WP12	Create Risk and Uncertainty Reduction Framework
	Title	12.1 Uncertainty Quantification Model
	Type	Output
	Description	A model to qualitatively and quantitatively assess the uncertainty of the simulation results. The model will be based on a combination of forward and inverse uncertainty quantification approaches applicable to the diffusion of innovations from ideation through market saturation. The model will measure the ability of the innovation system(s) to be accelerated including definition of the uncertainty range(s) associated with these measurements. The model will be embedded in the Integrated Simulation (Version 3.0) and generate relevant insights for each scenario assessed. The model will initially be fully based on a theoretical inverse uncertainty quantification approach without

		further input. This will be expanded as the number of available simulations for review grows. After assessment of the business simulations the approach will be refined to include expert opinions and analogies. After completion of WP11 the model will be refined to include geometric forecasting approaches. After completion of WP13 the model will be refined to include parametric forecasting approaches. After completion of WP14 the model will be refined to include statistical forecasting approaches. This result will be delivered by: P2
	Due date	M20
	Language(s)	English
	Media(s)	Electronic version published in media
Dissemination level	☒ Public ☐ Restricted to other programme participants (including Commission services and project reviewers) ☐ Confidential, only for members of the consortium (including EACEA and Commission services and project reviewers)	

Expected result (output or outcome)	WP12	Create Risk and Uncertainty Reduction Framework
	Title	12.2 Refined Framework Scenarios and Key Risk Threats and Opportunities
	Type	Output
	Description	A revision of the framework scenarios defined in work package 4 based on influencers of innovation system simulation arising from political, economic, social, technological, environmental and legal (including policy) factors (PESTLE) and cultural factors (such as discussed by Hofstede cultural dimensions). The results of the PESTLE analysis will be used to identify the key risk threats and opportunities related to accelerating the diffusion of innovation(s) systems. The risk threats and opportunities will be phrased as IF / THEN statements, clearly identify the event(s) or condition(s) giving rise to them, the project consequences on the performance of the innovation system(s), and the primary causes leading to these risks arising. The formulation of the risks must be focused sufficiently to enable a clear impact-probability assessment and a robust selection of an actionable intervention to reduce a risk threat or capitalize on a risk opportunity. At least three risk threats and three risk opportunities are identified for each PESTLE category. This result will be delivered by: P2
	Due date	M18
	Language(s)	English
	Media(s)	Electronic version published in media
Dissemination level	☒ Public ☐ Restricted to other programme participants (including Commission services and project reviewers) ☐ Confidential, only for members of the consortium (including EACEA and Commission services and project reviewers)	

	WP12	Create Risk and Uncertainty Reduction Framework

Expected result (output or outcome)	Title	12.3 Scoring Scheme
	Type	Output
	Description	A scoring scheme for assessing the risk threat and opportunity probabilities and impacts (includes definition of relevant assessment variables and ranges) as related to the previously identified key risks threats and opportunities of relevance. The impact will be described based on the relevant financial and intellectual capital indicators as used / generated by the simulation and related to simulation (in-) dependent variable (ranges of) values as relevant. The probability will be described based on the results of running the simulation enough times in work package 4 to ensure the robustness of statistical evaluation tools (therefore at least 41 times per scenario). The scoring scheme will furthermore provide a simple technique for qualitative evaluation on a 5 range scale (Very High, High, Medium, Low, Very Low) for both impact and probability. The single point values of the simple technique for probability and impact will be the median values of the statistical ranges generated by the simulations. This result will be delivered by: P2
	Due date	M16
	Language(s)	English
	Media(s)	Electronic version published in media
Dissemination level	☒ Public ☐ Restricted to other programme participants (including Commission services and project reviewers) ☐ Confidential, only for members of the consortium (including EACEA and Commission services and project reviewers)	

Expected result (output or outcome)	WP12	Create Risk and Uncertainty Reduction Framework
	Title	12.4 Innovation System Simulation Maturity Assessment Technique
	Type	Output
	Description	A technique to assess innovation simulation maturity against key risk threats and opportunities including relevant assessment questions and weighting methods. The maturity will be assessed against the impact of the key risk threats and opportunities on the key variables influencing the ability of the innovation system(s) to be accelerated. The maturity will be quantified at 9 levels aligned to the concepts of Technology Readiness Level and Cost Estimate Maturity as put forward by NASA, AACE and COCOMO II. Of further potential relevance is the "Manufacturing Readiness Level" (MRL) as developed by Dept. Defence USA (https://www.smmt.co.uk/wp-content/uploads/sites/2/Automotive-Technology-and-Manufacturing-Readiness-Levels.pdf). The assessment maturity will be generated by a question set aligned to the key risk threats and opportunities. Each question will be phrased to enable assessment against a 5 range scale (Very High, High, Medium, Low, Very Low) which then sets the foundation for the identification of maturity improvement activities. This result will be delivered by: P2
	Due date	M17

	Language(s)	English
	Media(s)	Electronic version published in media
Dissemination level	☒ Public ☐ Restricted to other programme participants (including Commission services and project reviewers) ☐ Confidential, only for members of the consortium (including EACEA and Commission services and project reviewers)	

Expected result (output or outcome)	WP12	Create Risk and Uncertainty Reduction Framework
	Title	12.5 Intervention (Selection) Technique
	Type	Output
	Description	A set of generic interventions to increase simulation maturity levels and a technique for selecting the more effective and actionable depending on various business conditions (i.e. funding constraints). The interventions will be based on the maturity questions while the selection technique will be based on sensitivity rankings determined through appropriate co-variance analyses performed as part of the simulation runs similar to the manner in which Monte Carlo simulations will determine sensitivities of line items evaluated against. The interventions will coherently connect back to maturity assessment questions, key risk threats and opportunities, simulation scenarios and verification and validation through relevant simulation configuration and runs. The technique will enable the development and implementation of game playing scenarios. The technique will be embedded in the Integrated Simulation (Version 3.0) and generate relevant insights for each scenario assessed. This result will be delivered by: P2
	Due date	M17
	Language(s)	English
	Media(s)	Electronic version published in media
Dissemination level	☒ Public ☐ Restricted to other programme participants (including Commission services and project reviewers) ☐ Confidential, only for members of the consortium (including EACEA and Commission services and project reviewers)	

Expected result (output or outcome)	WP12	Create Risk and Uncertainty Reduction Framework
	Title	12.6 Risk Visualization Method
	Type	Output
	Description	A method for visualizing risk and uncertainty progression (including impact of treatment) including comparison of scenarios and influence of interventions. The approach is intended as a graphical visualization of the uncertainty progression associated with varying scenarios and the impact of interventions selected in order to support deciding on (combinations of) interventions. Design criteria will include an understanding of the problem

		being addressed through the scenarios and case studies, a definition of relevant data (i.e. quantitative, ordinal, categorical), a selection of the dimensions required to represent the data (i.e. univariate, bivariate, trivariate, multivariate), the structure of the data to be visualized (i.e. linear, temporal, spatial, hierarchical, networked) and interactions required by the various users of the simulation (i.e. static, transformable, manipulable). The method will be embedded in the Integrated Simulation (Version 3.0). This result will be delivered by: P2
	Due date	M17
	Language(s)	English
	Media(s)	Electronic version published in media
Dissemination level	☒ Public ☐ Restricted to other programme participants (including Commission services and project reviewers) ☐ Confidential, only for members of the consortium (including EACEA and Commission services and project reviewers)	

Expected result (output or outcome)	WP12	Create Risk and Uncertainty Reduction Framework
	Title	12.7 Baseline Integrated Risk and Uncertainty Framework (Version 1.0)
	Type	Output
	Description	A baseline integrated risk and uncertainty framework (Version 1.0) which combines the uncertainty quantification model, the framework scenarios, the scoring scheme, the maturity assessment technique, the intervention (selection) technique and the risk visualization method. The framework is implemented as an add-on to the Integrated Simulation (Version 3.0). The result includes a technical guide, a user guide and training materials. This result will be delivered by: P2
	Due date	M17
	Language(s)	English
	Media(s)	Electronic version published in media
Dissemination level	☒ Public ☐ Restricted to other programme participants (including Commission services and project reviewers) ☐ Confidential, only for members of the consortium (including EACEA and Commission services and project reviewers)	

Expected result (output or outcome)	WP12	Create Risk and Uncertainty Reduction Framework
	Title	12.8 Validation of Framework with Business
	Type	Output
	Description	The baseline integrated risk and uncertainty framework (Version 1.0) validated against the generated business simulations and with the business organizations participating in the project. The emphasis lies on a “sanity

		check" of the interventions suggested by the framework for reducing risk and uncertainty related to the simulation outputs in respect to innovation system(s) diffusion of innovation acceleration. The validation with the business organizations is completed through Workshops with these organizations where both the Integrated Simulation (Version 3.0) is used as well as the business simulation version specific to the business organization. This result will be delivered by: P2
	Due date	M18
	Language(s)	English
	Media(s)	Other (Signed training participation lists)
Dissemination level	☒ Public ☐ Restricted to other programme participants (including Commission services and project reviewers) ☐ Confidential, only for members of the consortium (including EACEA and Commission services and project reviewers)	

Expected result (output or outcome)	WP12	Create Risk and Uncertainty Reduction Framework
	Title	12.9 Integrated Risk and Uncertainty Framework (Version 2.0) – Analogy and Expert Opinion
	Type	Output
	Description	A revision of the Integrated Risk and Uncertainty Framework (Version 1.0) based on the results of WP11. This includes revision of all supporting materials. This result will be delivered by: P2
	Due date	M19
	Language(s)	English
	Media(s)	Electronic version published in media
Dissemination level	☒ Public ☐ Restricted to other programme participants (including Commission services and project reviewers) ☐ Confidential, only for members of the consortium (including EACEA and Commission services and project reviewers)	

Expected result (output or outcome)	WP12	Create Risk and Uncertainty Reduction Framework
	Title	12.10 Enablement of WP13
	Type	Output
	Description	Through enablement of the owners, assigned researchers and supporting project members for work package 6 will be placed in a position to use the Integrated Risk and Uncertainty Framework (Version 2.0) as the basis for starting to address the tasks in their work packages. Enablement will involve training relevant project members in depth using training materials developed by work package 5. Enablement will furthermore involve advice and

		guidance on how best to apply the Integrated Risk and Uncertainty Framework (Version 2.0) within these work packages. Enablement will also contain ongoing support services in respect to operating the Integrated Risk and Uncertainty Framework (Version 2.0) and necessary change management. This result will be delivered by: P2
	Due date	M20
	Language(s)	English
	Media(s)	Other (Signed training participation lists)
Dissemination level	☐ Public ☐ Restricted to other programme participants (including Commission services and project reviewers) ☒ Confidential, only for members of the consortium (including EACEA and Commission services and project reviewers)	

Expected result (output or outcome)	WP12	Create Risk and Uncertainty Reduction Framework
	Title	12.11 Integrated Risk and Uncertainty Framework (Version 3.0) – Analogy and Expert Opinion
	Type	Output
	Description	A revision of the Integrated Risk and Uncertainty Framework (Version 2.0) based on the results of WP11. This includes revision of all supporting materials. This result will be delivered by: P2
	Due date	M21
	Language(s)	English
	Media(s)	Electronic version published in media
Dissemination level	☒ Public ☐ Restricted to other programme participants (including Commission services and project reviewers) ☐ Confidential, only for members of the consortium (including EACEA and Commission services and project reviewers)	

Expected result (output or outcome)	WP12	Create Risk and Uncertainty Reduction Framework
	Title	12.12 Integrated Risk and Uncertainty Framework Submitted for Journal Publication
	Type	Output
	Description	Paper submitted to relevant journal. This result will be delivered by: P2
	Due date	M21

	Language(s)	English
	Media(s)	Electronic version published in media
Dissemination level	☒ Public ☐ Restricted to other programme participants (including Commission services and project reviewers) ☐ Confidential, only for members of the consortium (including EACEA and Commission services and project reviewers)	

Expected result (output or outcome)	WP12	Create Risk and Uncertainty Reduction Framework
	Title	12.13 Contribute to WP6
	Type	Output
	Description	A technical user guide and a practitioner user guide provided to WP6. This result will be delivered by: P2
	Due date	M20
	Language(s)	English
	Media(s)	Other (Signed training participation lists)
Dissemination level	☐ Public ☐ Restricted to other programme participants (including Commission services and project reviewers) ☒ Confidential, only for members of the consortium (including EACEA and Commission services and project reviewers)	

WP12 Explanation of Work Package expenditures

This WP requires a total of 207 working days distributed across all project partners in various roles with a total implementation cost of approximately €34,000 plus travel/subsistence costs of approximately €1,500. The costs of this WP represent approximately 4% of the total project budget.

VII.1.13. Work Package 13 – *Create Design Principles for Rapid Diffusion of Innovative Ideas*

WP13 description

WP No.13	Create Design Principles for Rapid Diffusion of Innovative Ideas
Work Package/Activity type	☐ Preparation ☐ Management ☒ Implementation (the substance of the work planned including production, testing, etc.) ☐ Quality Assurance (quality plan) ☐ Evaluation ☐ Dissemination and Exploitation of results
Title	Create Design Principles for Rapid Diffusion of Innovative Ideas
Description	This implementation work package moves the focus from systems of innovation to the (clusters of) ideas traveling through those systems of innovation. The aim of the work package is to identify attributes of (clusters of) ideas which permit rapid progression through the diffusion of innovation lifecycle using the integrated simulation. Particular focus is placed on designing the idea for adoption by all adopters across all phases of the ideation to market saturation diffusion curve and in leveraging the previously identified game changers (WP11)) and risk threat / opportunity influencing techniques (WP12). This work package sets the foundation for the implementation WP14. This work package will require in-depth familiarity with the integrated simulation.
Tasks	• 13.1: Literature Research. Conduct a literature research on key attributes of (clusters of) ideas for diffusing rapidly from ideation through market saturation. Focus on key themes identified by previous project learning and provide an overview of historical developments, the current state, and future themes. • 13.2: Identify Potential Actionable Design Principles. Identify potentially actionable principles for designing (clusters of) ideas that enable rapid diffusion from ideation to market saturation. Structure those that apply specifically to the (cluster of) ideas, those that build on the game changers identified in WP11 and such that apply to the relationship between the two (over time). • 13.3: Develop Testing Technique. Develop and validate a technique for testing the effectiveness of the (combination of) actionable design principles within the integrated simulation. The technique will strictly follow principles of scientific experimentation. • 13.4: Verified Actionable Design Principles. Apply testing technique using previously developed business simulations and case studies cases. Distil relevant ideas, test their diffusion speed in the simulation and apply actionable design principles to examine acceleration opportunities. • 13.5: Enable WP14. Develop guidance for WP14 to integrate and apply the actionable design principles using the integrated simulation to ideas that will be generated in their Workshops. • 13.6: Write Up Design Principles as Submission for Journal Publication. Write up design principles as a journal publication and submit to a relevant journal in top 10% of comparable journal impact factors. • 13.7: Contribute to WP6. Design principles provided to WP6 in the form of a user guide.

WP No.13	Create Design Principles for Rapid Diffusion of Innovative Ideas
Estimated start date	M19
Estimated end date	M24
Lead organisation	P9
Participating organisations	P1-P8, P10-P28

WP13 Results (outputs and outcomes)

Expected result (output or outcome)	WP13	Create Design Principles for Rapid Diffusion of Innovative Ideas
	Title	13.1 Literature Research
	Type	Output
	Description	A literature research on key attributes of (clusters of) ideas for diffusing rapidly from ideation through market saturation. Focus on key themes identified by previous project learning and provide an overview of historical developments, the current state, and future themes. This result will be delivered by: P9
	Due date	M19
	Language(s)	English
	Media(s)	Electronic version published in media
Dissemination level	☒ Public ☐ Restricted to other programme participants (including Commission services and project reviewers) ☐ Confidential, only for members of the consortium (including EACEA and Commission services and project reviewers)	

Expected result (output or outcome)	WP13	Create Design Principles for Rapid Diffusion of Innovative Ideas
	Title	13.2 Potential Actionable Design Principles
	Type	Output
	Description	Potentially actionable principles for designing (clusters of) ideas that enable rapid diffusion from ideation to market saturation. Structured to apply specifically to the (cluster of) ideas, those that build on the game changers identified in WP11 and such that apply to the relationship between the two (over time). This result will be delivered by: P9
	Due date	M20
	Language(s)	English

	Media(s)	Electronic version published in media
Dissemination level	☒ Public ☐ Restricted to other programme participants (including Commission services and project reviewers) ☐ Confidential, only for members of the consortium (including EACEA and Commission services and project reviewers)	

Expected result (output or outcome)	WP13	Create Design Principles for Rapid Diffusion of Innovative Ideas
	Title	13.3 Testing Technique
	Type	Output
	Description	A technique for testing the effectiveness of the (combination of) actionable design principles within the integrated simulation. The technique will strictly follow principles of scientific experimentation. This result will be delivered by: P9
	Due date	M21
	Language(s)	English
	Media(s)	Electronic version published in media
Dissemination level	☒ Public ☐ Restricted to other programme participants (including Commission services and project reviewers) ☐ Confidential, only for members of the consortium (including EACEA and Commission services and project reviewers)	

Expected result (output or outcome)	WP13	Create Design Principles for Rapid Diffusion of Innovative Ideas
	Title	13.4 Verified Actionable Design Principles
	Type	Output
	Description	Design principles verified through scientific testing as actionable to accelerate the diffusion of ideas from ideation to market saturation. This result will be delivered by: P9
	Due date	M22
	Language(s)	English
	Media(s)	Electronic version published in media
Dissemination level	☒ Public ☐ Restricted to other programme participants (including Commission services and project reviewers) ☐ Confidential, only for members of the consortium (including EACEA and Commission services and project reviewers)	

Expected result (output or outcome)	WP13	Create Design Principles for Rapid Diffusion of Innovative Ideas
	Title	13.5 WP14 enabled
	Type	Output
	Description	WP14 enabled to integrate and apply the actionable design principles using the integrated simulation to ideas that will be generated in their Workshops. This result will be delivered by: P9
	Due date	M23
	Language(s)	English
	Media(s)	Other (Signed training participation lists)
Dissemination level	☐ Public ☐ Restricted to other programme participants (including Commission services and project reviewers) ☒ Confidential, only for members of the consortium (including EACEA and Commission services and project reviewers)	

Expected result (output or outcome)	WP13	Create Design Principles for Rapid Diffusion of Innovative Ideas
	Title	13.6 Design Principles Submitted for Journal Publication
	Type	Output
	Description	Paper submitted to relevant journal. This result will be delivered by: P9
	Due date	M24
	Language(s)	English
	Media(s)	Electronic version published in media
Dissemination level	☒ Public ☐ Restricted to other programme participants (including Commission services and project reviewers) ☐ Confidential, only for members of the consortium (including EACEA and Commission services and project reviewers)	

Expected result (output or outcome)	WP13	Create Design Principles for Rapid Diffusion of Innovative Ideas
	Title	13.7 Contribute to WP6
	Type	Output
	Description	A user guide provided to WP6. This result will be delivered by: P9
	Due date	M24

	Language(s)	English
	Media(s)	Other (Signed training participation lists)
Dissemination level	☐ Public ☐ Restricted to other programme participants (including Commission services and project reviewers) ☒ Confidential, only for members of the consortium (including EACEA and Commission services and project reviewers)	

WP13 Explanation of Work Package expenditures

This WP requires a total of 180 working days distributed across all project partners in various roles with a total implementation cost of approximately €45,000 plus travel/subsistence costs of approximately €6,500. The costs of this WP represent approximately 5% of the total project budget.

VII.1.14. Work Package 14 – *Validate Research Findings with Experimental Labs*

WP14 description

WP No.14	Validate Research Findings with Experimental Labs
Work Package/Activity type	☐ Preparation ☐ Management ☒ Implementation (the substance of the work planned including production, testing, etc.) ☐ Quality Assurance (quality plan) ☐ Evaluation ☐ Dissemination and Exploitation of results
Title	Validate Research Findings with Experimental Labs
Description *(Recommended limit 1500 characters)*	This implementation work package focuses on collaborating with business enterprises participating in the project to validate project efforts using principles of experimental innovation. Experimental innovation is rooted in the ground of creative ignorance, that which by design comes after, not before, knowledge and unlocks otherwise unthinkable paths of economic growth and social development. Creative ignorance constantly searches for the inner nature of things through intuition. For business participants the aim is to transpose, test and iterate new ideas and models in a business laboratory for promoting rapid learning and the preliminary validation of a new business idea. For the project the aim of the work package is to validate year 1 and year 2 findings in the contexts where innovation actually occurs. During the first two years, the main goal of the project was identifying the key factors of successful innovative ideas and building a simulation of the diffusion of these. The experimental labs will use the findings of the first two years to validate both the key factors and the software. The work package will conduct Experimental Labs in each of the regions with participating business enterprises, whereby participation is opened to other interested parties in the project network and other business enterprises in the region where the effort is being conducted. The workshop will be hosted by an institute for higher education in the region. Each Experimental Lab will last for three days. The first day is focused on stage-setting and training. The second day will conduct a Workshop using experimental innovation techniques. The third day will debrief results from the second day, agree on next steps and provide input to final refinement of project results to date. Training materials will be developed as part of WP6.
Tasks	• 14.1: Create Design Guidelines for Experimental Labs. Create design guidelines for the Experimental Labs based on project learning to date. The design guidelines should provide clear instructions for preparing the Experimental Labs in the most effective manner considering such principles such as intuitiveness, learnability, efficiency, and consistency. The design guidelines should furthermore ensure high quality experimental innovation efforts. All WP members are to be trained in the design guidelines. • 14.2: Prepare Experimental Labs. Prepare three day Experimental Labs with a focus on experimental innovation. Preparation will include a highly scripted play book, detailed agendas and collaboration with WP6 to develop appropriate training materials and templates. The first day is focused on stage-setting and training. The second day will conduct an Experimental Lab focused on experimental innovation. The third day will debrief results from the second day and agree on next steps. Preparation will furthermore include organizing an

WP No.14	Validate Research Findings with Experimental Labs
	appropriate venue and marketing the event in the region to solicit further participants. • 14.3: Deliver Experimental Labs. Deliver three day Experimental Labs in regions based on the play book, agendas and training material developed in collaboration with WP6. Particular emphasis is to be placed on working with participants to (a) validate project deliverables to date (b) use the integrated simulation and idea design principles in their personal contexts and gain feedback to improve the user experience (c) translate the experimental innovation results into high quality case studies for learning activities. • 14.4: Create Case Studies. Create case studies for each of the business enterprises that participated at the Experimental Labs. These case studies should be aligned with the business simulations created as part of WP8 and the needs analysis completed as part of WP9. • 14.5: Contribute to WP6. Provide case studies in the form of business school case study formats to WP6.
Estimated start date	M23
Estimated end date	M28
Lead organisation	P10
Participating organisations	P1-P9, P11-P28

WP14 Results (outputs and outcomes)

Expected result (output or outcome)	WP14	Validate Research Findings
	Title	14.1 Design Guidelines for Experimental Labs
	Type	Output
	Description	Design guidelines for the Experimental Labs providing clear instructions for preparing the Experimental Labs in the most effective manner considering such principles such as intuitiveness, learnability, efficiency, and consistency. Prior learning from other workshop deliveries during the project will be considered. The design guidelines will establish the success criteria for events with multi-disciplinary co-creation, exploration, experimentation and evaluation of the case studies using the Integrated Simulation and insights gained during the needs analysis. This result will be delivered by: P10
	Due date	M23
	Language(s)	English
	Media(s)	Electronic version published in media
Dissemination level	☒ Public ☐ Restricted to other programme participants (including Commission services and project reviewers)	

	☐ Confidential, only for members of the consortium (including EACEA and Commission services and project reviewers)

Expected result (output or outcome)	WP14	Validate Research Findings
	Title	14.2 Experimental Labs Agenda and Materials
	Type	Output
	Description	A highly scripted play book for the event containing detailed agendas. Furthermore collaboration with WP6 to develop appropriate training materials and case study templates. An appropriate venue is agreed and an appropriate multi-disciplinary participant lists is finalized and confirmed. This result will be delivered by: P10
	Due date	M23
	Language(s)	English
	Media(s)	Electronic version published in media
Dissemination level	☒ Public ☐ Restricted to other programme participants (including Commission services and project reviewers) ☐ Confidential, only for members of the consortium (including EACEA and Commission services and project reviewers)	

Expected result (output or outcome)	WP14	Validate Research Findings
	Title	14.3 Experimental Labs Delivered
	Type	Output
	Description	Three day (Living) Experimental Labs in regions are delivered and all information for creating in-depth case studies has been gathered. This result will be delivered by: P10
	Due date	M30
	Language(s)	English
	Media(s)	Other (Signed training participation lists)
Dissemination level	☒ Public ☐ Restricted to other programme participants (including Commission services and project reviewers) ☐ Confidential, only for members of the consortium (including EACEA and Commission services and project reviewers)	

Expected result (output or outcome)	WP14	Validate Research Findings
	Title	14.4 Case Studies Created
	Type	Output

	Description	Case studies for each of the business enterprises that participated at the Workshops are created and aligned with learning to date. Case studies are provided to WP6 in order to embed such in the training materials. This result will be delivered by: P10
	Due date	M30
	Language(s)	English
	Media(s)	Electronic version published in media
Dissemination level	☒ Public ☐ Restricted to other programme participants (including Commission services and project reviewers) ☐ Confidential, only for members of the consortium (including EACEA and Commission services and project reviewers)	

Expected result (output or outcome)	WP14	Validate Research Findings
	Title	14.5 Contribute to WP6
	Type	Output
	Description	Provide case studies in the form of business school case study formats to WP6. This result will be delivered by: P10
	Due date	M30
	Language(s)	English
	Media(s)	Other (Signed training participation lists)
Dissemination level	☐ Public ☐ Restricted to other programme participants (including Commission services and project reviewers) ☒ Confidential, only for members of the consortium (including EACEA and Commission services and project reviewers)	

WP14 Explanation of Work Package expenditures

This WP requires a total of 128 working days distributed across all project partners in various roles with a total implementation cost of approximately €35,000 plus travel/subsistence costs of approximately €16,000. The costs of this WP represent approximately 4% of the total project budget.

VII.2. Overview of consortium partners involved and resources required

Nº of Work Package	Lead partner	Partners involved	Country	Number of staff days					Role and tasks in the Work Package
				Category 1	Category 2	Category 3	Category 4	Total	
1	**Lead partner**	P1 Eurofocus International Consultants Ltd.	Germany	20	N/A	N/A	N/A	20	**Task Owner:** - Overall Workpackage **Task Contributor:** - N/A
		P2 Tuke University	Slovakia	2	N/A	N/A	N/A	2	**Task Owner:** - 1.7, 1.13 **Task Contributor:** - 1.1, 1.2, 1.3, 1.4, 1.5, 1.6, 1.8, 1.9, 1.10, 1.11, 1.12, 1.14, 1.15
		P3 Riga Technical University	Latvia	2	N/A	N/A	N/A	2	**Task Owner:** - 1.15 **Task Contributor:** - 1.1, 1.2, 1.3, 1.4, 1.5, 1.6, 1.7, 1.8, 1.9, 1.10, 1.11, 1.12, 1.13, 1.14
		P4 University of Lisbon	Portugal	2	N/A	N/A	N/A	2	**Task Owner:** - N/A **Task Contributor:** - 1.1, 1.2, 1.3, 1.4, 1.5, 1.6, 1.7, 1.8, 1.9, 1.10, 1.11, 1.12, 1.13, 1.14, 1.15
		P5 ed-Media	Germany	11	N/A	N/A	N/A	11	**Task Owner:** - 1.8, 1.12 **Task Contributor:** - 1.1, 1.2, 1.3, 1.4, 1.5, 1.6, 1.7, 1.9, 1.10, 1.11, 1.13, 1.14, 1.15
		P6 Pasher & Associates	Israel	2	N/A	N/A	N/A	2	**Task Owner:** - N/A **Task Contributor:** - 1.1, 1.2, 1.3, 1.4, 1.5, 1.6, 1.7, 1.8, 1.9, 1.10, 1.11, 1.12, 1.13, 1.14, 1.15
		P7 Eurecons Förderagentur GmbH	Germany	2	N/A	N/A	N/A	2	**Task Owner:** - N/A **Task Contributor:** - 1.1, 1.2, 1.3, 1.4, 1.5, 1.6, 1.7, 1.8, 1.9, 1.10, 1.11, 1.12, 1.13, 1.14, 1.15
		P8 National University of Ireland Maynooth	Ireland	2	N/A	N/A	N/A	2	**Task Owner:** - N/A **Task Contributor:**

Nº of Work Package	Lead partner	Partners involved	Country	Number of staff days					Role and tasks in the Work Package
				Category 1	Category 2	Category 3	Category 4	Total	
									- 1.1, 1.2, 1.3, 1.4, 1.5, 1.6, 1.7, 1.8, 1.9, 1.10, 1.11, 1.12, 1.13, 1.14, 1.15
		P9 Technische Universität Berlin	Germany	2	N/A	N/A	N/A	2	**Task Owner:** - N/A **Task Contributor:** - 1.1, 1.2, 1.3, 1.4, 1.5, 1.6, 1.7, 1.8, 1.9, 1.10, 1.11, 1.12, 1.13, 1.14, 1.15
		P10 University of Padova	Italy	2	N/A	N/A	N/A	2	**Task Owner:** - N/A **Task Contributor:** - 1.1, 1.2, 1.3, 1.4, 1.5, 1.6, 1.7, 1.8, 1.9, 1.10, 1.11, 1.12, 1.13, 1.14, 1.15
		P11 Hochschule Kaiserslautern	Germany	11	N/A	N/A	N/A	11	**Task Owner:** - N/A **Task Contributor:** - 1.1, 1.2, 1.3, 1.4, 1.5, 1.6, 1.7, 1.8, 1.9, 1.10, 1.11, 1.12, 1.13, 1.14, 1.15
		P12 GB Innovation Ltd.	Ireland	2	N/A	N/A	N/A	2	**Task Owner:** - N/A **Task Contributor:** - 1.1, 1.2, 1.3, 1.4, 1.5, 1.6, 1.7, 1.8, 1.9, 1.10, 1.11, 1.12, 1.13, 1.14, 1.15
		P13 University of Luxembourg	Luxembourg	2	N/A	N/A	N/A	2	**Task Owner:** - N/A **Task Contributor:** - 1.1, 1.2, 1.3, 1.4, 1.5, 1.6, 1.7, 1.8, 1.9, 1.10, 1.11, 1.12, 1.13, 1.14, 1.15
		P14 Airholding - Embraer Research and Technology Europe	Portugal	2	N/A	N/A	N/A	2	**Task Owner:** - N/A **Task Contributor:** - 1.1, 1.2, 1.3, 1.4, 1.5, 1.6, 1.7, 1.8, 1.9, 1.10, 1.11, 1.12, 1.13, 1.14, 1.15
		P15 BERD	Portugal	2	N/A	N/A	N/A	2	**Task Owner:** - N/A **Task Contributor:** - 1.1, 1.2, 1.3, 1.4, 1.5, 1.6, 1.7, 1.8, 1.9, 1.10, 1.11, 1.12, 1.13, 1.14, 1.15
		P16 Exceuticals	Portugal	2	N/A	N/A	N/A	2	**Task Owner:** - N/A **Task Contributor:**

Nº of Work Package	Lead partner	Partners involved	Country	Number of staff days					Role and tasks in the Work Package
				Category 1	Category 2	Category 3	Category 4	Total	
									- 1.1, 1.2, 1.3, 1.4, 1.5, 1.6, 1.7, 1.8, 1.9, 1.10, 1.11, 1.12, 1.13, 1.14, 1.15
		P17 Ausys Automation Systems	Slovakia	2	N/A	N/A	N/A	2	**Task Owner:** - N/A **Task Contributor:** - 1.1, 1.2, 1.3, 1.4, 1.5, 1.6, 1.7, 1.8, 1.9, 1.10, 1.11, 1.12, 1.13, 1.14, 1.15
		P18 Sabanci University	Turkey	2	N/A	N/A	N/A	2	**Task Owner:** - N/A **Task Contributor:** - 1.1, 1.2, 1.3, 1.4, 1.5, 1.6, 1.7, 1.8, 1.9, 1.10, 1.11, 1.12, 1.13, 1.14, 1.15
		P19 Edelweiss Connect GmbH	Switzerland	2	N/A	N/A	N/A	2	**Task Owner:** - N/A **Task Contributor:** - 1.1, 1.2, 1.3, 1.4, 1.5, 1.6, 1.7, 1.8, 1.9, 1.10, 1.11, 1.12, 1.13, 1.14, 1.15
		P20 University of Bremen	Germany	2	N/A	N/A	N/A	2	**Task Owner:** - N/A **Task Contributor:** - 1.1, 1.2, 1.3, 1.4, 1.5, 1.6, 1.7, 1.8, 1.9, 1.10, 1.11, 1.12, 1.13, 1.14, 1.15
		P21 Impetus Solutions	India	40	N/A	N/A	N/A	40	**Task Owner:** - 1.5, 1.14 **Task Contributor:** - 1.1, 1.2, 1.3, 1.4, 1.6, 1.7, 1.8, 1.9, 1.10, 1.11, 1.12, 1.13, 1.15
		P22 Kaunas University of Technology	Lithuania	2	N/A	N/A	N/A	2	**Task Owner:** - N/A **Task Contributor:** - 1.1, 1.2, 1.3, 1.4, 1.5, 1.6, 1.7, 1.8, 1.9, 1.10, 1.11, 1.12, 1.13, 1.14, 1.15
		P23 Vilnius University	Lithuania	2	N/A	N/A	N/A	2	**Task Owner:** - N/A **Task Contributor:** - 1.1, 1.2, 1.3, 1.4, 1.5, 1.6, 1.7, 1.8, 1.9, 1.10, 1.11, 1.12, 1.13, 1.14, 1.15
		P24 Rolls-Royce Deutschland Ltd & Co KG	Germany	2	N/A	N/A	N/A	2	**Task Owner:** - N/A **Task Contributor:**

Nº of Work Package	Lead partner	Partners involved	Country	Number of staff days					Role and tasks in the Work Package
				Category 1	Category 2	Category 3	Category 4	Total	
									- 1.1, 1.2, 1.3, 1.4, 1.5, 1.6, 1.7, 1.8, 1.9, 1.10, 1.11, 1.12, 1.13, 1.14, 1.15
		P25 Entovation International Ltd.	USA	2	N/A	N/A	N/A	2	**Task Owner:** - N/A **Task Contributor:** - 1.1, 1.2, 1.3, 1.4, 1.5, 1.6, 1.7, 1.8, 1.9, 1.10, 1.11, 1.12, 1.13, 1.14, 1.15
		P26 Volvo Lastvagnar AB	Sweden	2	N/A	N/A	N/A	2	**Task Owner:** - N/A **Task Contributor:** - 1.1, 1.2, 1.3, 1.4, 1.5, 1.6, 1.7, 1.8, 1.9, 1.10, 1.11, 1.12, 1.13, 1.14, 1.15
		P27 Ariston Cavi	Italy	2	N/A	N/A	N/A	2	**Task Owner:** - N/A **Task Contributor:** - 1.1, 1.2, 1.3, 1.4, 1.5, 1.6, 1.7, 1.8, 1.9, 1.10, 1.11, 1.12, 1.13, 1.14, 1.15
		P28 Baladi Ltd	Israel	2	N/A	N/A	N/A	2	**Task Owner:** - N/A **Task Contributor:** - 1.1, 1.2, 1.3, 1.4, 1.5, 1.6, 1.7, 1.8, 1.9, 1.10, 1.11, 1.12, 1.13, 1.14, 1.15
	Subtotal			**130**	**0**	**0**	**0**	**130**	

Nº of Work Package	Lead partner	Partners involved	Country	Number of staff days					Role and tasks in the Work Package
				Category 1	Category 2	Category 3	Category 4	Total	
2	**Lead partner**	P1 Eurofocus International Consultants Ltd.	Germany	200	N/A	N/A	N/A	200	**Task Owner:** - Overall Workpackage **Task Contributor:** - N/A
		P2 Tuke University	Slovakia	2	N/A	N/A	N/A	2	**Task Owner:** - 2.5, 2.11 **Task Contributor:** - 2.1, 2.2, 2.3, 2.4, 2.6, 2.7, 2.8, 2.9, 2.10, 2.10
		P3 Riga Technical University	Latvia	2	N/A	N/A	N/A	2	**Task Owner:** - N/A **Task Contributor:** - 2.1, 2.2, 2.3, 2.4, 2.5, 2.6, 2.7, 2.8, 2.9, 2.10, 2.10, 2.11
		P4 University of Lisbon	Portugal	2	N/A	N/A	N/A	2	**Task Owner:** - N/A **Task Contributor:** - 2.1, 2.2, 2.3, 2.4, 2.5, 2.6, 2.7, 2.8, 2.9, 2.10, 2.10, 2.11
		P5 ed-Media	Germany	2	N/A	N/A	N/A	2	**Task Owner:** - N/A **Task Contributor:** - 2.1, 2.2, 2.3, 2.4, 2.5, 2.6, 2.7, 2.8, 2.9, 2.10, 2.10, 2.11
		P6 Pasher & Associates	Israel	2	N/A	N/A	N/A	2	**Task Owner:** - N/A **Task Contributor:** - 2.1, 2.2, 2.3, 2.4, 2.5, 2.6, 2.7, 2.8, 2.9, 2.10, 2.10, 2.11
		P7 Eurecons Förderagentur GmbH	Germany	2	N/A	N/A	N/A	2	**Task Owner:** - N/A **Task Contributor:** - 2.1, 2.2, 2.3, 2.4, 2.5, 2.6, 2.7, 2.8, 2.9, 2.10, 2.10, 2.11
		P8 National University of Ireland Maynooth	Ireland	2	N/A	N/A	N/A	2	**Task Owner:** - N/A **Task Contributor:** - 2.1, 2.2, 2.3, 2.4, 2.5, 2.6, 2.7, 2.8, 2.9, 2.10, 2.10, 2.11

Nº of Work Package	Lead partner	Partners involved	Country	Number of staff days					Role and tasks in the Work Package
				Category 1	Category 2	Category 3	Category 4	Total	
		P9 Technische Universität Berlin	Germany	2	N/A	N/A	N/A	2	**Task Owner:** - N/A **Task Contributor:** - 2.1, 2.2, 2.3, 2.4, 2.5, 2.6, 2.7, 2.8, 2.9, 2.10, 2.10, 2.11
		P10 University of Padova	Italy	2	N/A	N/A	N/A	2	**Task Owner:** - N/A **Task Contributor:** - 2.1, 2.2, 2.3, 2.4, 2.5, 2.6, 2.7, 2.8, 2.9, 2.10, 2.10, 2.11
		P11 Hochschule Kaiserslautern	Germany	2	N/A	N/A	N/A	2	**Task Owner:** - 2.7 **Task Contributor:** - 2.1, 2.2, 2.3, 2.4, 2.5, 2.6, 2.8, 2.9, 2.10, 2.10, 2.11
		P12 GB Innovation Ltd.	Ireland	2	N/A	N/A	N/A	2	**Task Owner:** - N/A **Task Contributor:** - 2.1, 2.2, 2.3, 2.4, 2.5, 2.6, 2.7, 2.8, 2.9, 2.10, 2.10, 2.11
		P13 University of Luxembourg	Luxembourg	2	N/A	N/A	N/A	2	**Task Owner:** - N/A **Task Contributor:** - 2.1, 2.2, 2.3, 2.4, 2.5, 2.6, 2.7, 2.8, 2.9, 2.10, 2.10, 2.11
		P14 Airholding - Embraer Research and Technology Europe	Portugal	2	N/A	N/A	N/A	2	**Task Owner:** - N/A **Task Contributor:** - 2.1, 2.2, 2.3, 2.4, 2.5, 2.6, 2.7, 2.8, 2.9, 2.10, 2.10, 2.11
		P15 BERD	Portugal	2	N/A	N/A	N/A	2	**Task Owner:** - N/A **Task Contributor:** - 2.1, 2.2, 2.3, 2.4, 2.5, 2.6, 2.7, 2.8, 2.9, 2.10, 2.10, 2.11
		P16 Exceuticals	Portugal	2	N/A	N/A	N/A	2	**Task Owner:** - N/A **Task Contributor:** - 2.1, 2.2, 2.3, 2.4, 2.5, 2.6, 2.7, 2.8, 2.9, 2.10, 2.10, 2.11

Nº of Work Package	Lead partner	Partners involved	Country	Number of staff days					Role and tasks in the Work Package
				Category 1	Category 2	Category 3	Category 4	Total	
		P17 Ausys Automation Systems	Slovakia	2	N/A	N/A	N/A	2	**Task Owner:** - N/A **Task Contributor:** - 2.1, 2.2, 2.3, 2.4, 2.5, 2.6, 2.7, 2.8, 2.9, 2.10, 2.10, 2.11
		P18 Sabanci University	Turkey	2	N/A	N/A	N/A	2	**Task Owner:** - N/A **Task Contributor:** - 2.1, 2.2, 2.3, 2.4, 2.5, 2.6, 2.7, 2.8, 2.9, 2.10, 2.10, 2.11
		P19 Edelweiss Connect GmbH	Switzerland	2	N/A	N/A	N/A	2	**Task Owner:** - N/A **Task Contributor:** - 2.1, 2.2, 2.3, 2.4, 2.5, 2.6, 2.7, 2.8, 2.9, 2.10, 2.10, 2.11
		P20 University of Bremen	Germany	2	N/A	N/A	N/A	2	**Task Owner:** - N/A **Task Contributor:** - 2.1, 2.2, 2.3, 2.4, 2.5, 2.6, 2.7, 2.8, 2.9, 2.10, 2.10, 2.11
		P21 Impetus Solutions	India	2	N/A	N/A	N/A	2	**Task Owner:** - N/A **Task Contributor:** - 2.1, 2.2, 2.3, 2.4, 2.5, 2.6, 2.7, 2.8, 2.9, 2.10, 2.10, 2.11
		P22 Kaunas University of Technology	Lithuania	2	N/A	N/A	N/A	2	**Task Owner:** - N/A **Task Contributor:** - 2.1, 2.2, 2.3, 2.4, 2.5, 2.6, 2.7, 2.8, 2.9, 2.10, 2.10, 2.11
		P23 Vilnius University	Lithuania	2	N/A	N/A	N/A	2	**Task Owner:** - N/A **Task Contributor:** - 2.1, 2.2, 2.3, 2.4, 2.5, 2.6, 2.7, 2.8, 2.9, 2.10, 2.10, 2.11
		P24 Rolls-Royce Deutschland Ltd & Co KG	Germany	2	N/A	N/A	N/A	2	**Task Owner:** - N/A **Task Contributor:** - 2.1, 2.2, 2.3, 2.4, 2.5, 2.6, 2.7, 2.8, 2.9, 2.10, 2.10, 2.11

Nº of Work Package	Lead partner	Partners involved	Country	Number of staff days					Role and tasks in the Work Package
				Category 1	Category 2	Category 3	Category 4	Total	
		P25 Entovation International Ltd.	USA	2	N/A	N/A	N/A	2	**Task Owner:** - N/A **Task Contributor:** - 2.1, 2.2, 2.3, 2.4, 2.5, 2.6, 2.7, 2.8, 2.9, 2.10, 2.10, 2.11
		P26 Volvo Lastvagnar AB	Sweden	2	N/A	N/A	N/A	2	**Task Owner:** - N/A **Task Contributor:** - 2.1, 2.2, 2.3, 2.4, 2.5, 2.6, 2.7, 2.8, 2.9, 2.10, 2.10, 2.11
		P27 Ariston Cavi	Italy	2	N/A	N/A	N/A	2	**Task Owner:** - N/A **Task Contributor:** - 2.1, 2.2, 2.3, 2.4, 2.5, 2.6, 2.7, 2.8, 2.9, 2.10, 2.10, 2.11
		P28 Baladi Ltd	Israel	2	N/A	N/A	N/A	2	**Task Owner:** - N/A **Task Contributor:** - 2.1, 2.2, 2.3, 2.4, 2.5, 2.6, 2.7, 2.8, 2.9, 2.10, 2.10, 2.11
	Subtotal			**254**	**0**	**0**	**0**	**254**	

Nº of Work Package	Lead partner	Partners involved	Country	Number of staff days					Role and tasks in the Work Package
				Category 1	Category 2	Category 3	Category 4	Total	
3		P1 Eurofocus International Consultants Ltd.	Germany	40	N/A	N/A	N/A	40	**Task Owner:** - N/A **Task Contributor:** - 3.1, 3.2, 3.3, 3.4, 3.5
	Lead partner	P2 Tuke University	Slovakia	180	N/A	N/A	N/A	180	**Task Owner:** - Overall Workpackage **Task Contributor:** - N/A
		P3 Riga Technical University	Latvia	2	N/A	N/A	N/A	2	**Task Owner:** - N/A **Task Contributor:** - 3.1, 3.2, 3.3, 3.4, 3.5
		P4 University of Lisbon	Portugal	2	N/A	N/A	N/A	2	**Task Owner:** - N/A **Task Contributor:** - 3.1, 3.2, 3.3, 3.4, 3.5
		P5 ed-Media	Germany	2	N/A	N/A	N/A	2	**Task Owner:** - N/A **Task Contributor:** - 3.1, 3.2, 3.3, 3.4, 3.5
		P6 Pasher & Associates	Israel	2	N/A	N/A	N/A	2	**Task Owner:** - N/A **Task Contributor:** - 3.1, 3.2, 3.3, 3.4, 3.5
		P7 Eurecons Förderagentur GmbH	Germany	2	N/A	N/A	N/A	2	**Task Owner:** - N/A **Task Contributor:** - 3.1, 3.2, 3.3, 3.4, 3.5
		P8 National University of Ireland Maynooth	Ireland	2	N/A	N/A	N/A	2	**Task Owner:** - N/A **Task Contributor:** - 3.1, 3.2, 3.3, 3.4, 3.5
		P9 Technische Universität Berlin	Germany	2	N/A	N/A	N/A	2	**Task Owner:** - N/A **Task Contributor:** - 3.1, 3.2, 3.3, 3.4, 3.5
		P10 University of Padova	Italy	2	N/A	N/A	N/A	2	**Task Owner:** - N/A

Nº of Work Package	Lead partner	Partners involved	Country	Number of staff days					Role and tasks in the Work Package
				Category 1	Category 2	Category 3	Category 4	Total	
									Task Contributor: - 3.1, 3.2, 3.3, 3.4, 3.5
		P11 Hochschule Kaiserslautern	Germany	2	N/A	N/A	N/A	2	**Task Owner:** - N/A **Task Contributor:** - 3.1, 3.2, 3.3, 3.4, 3.5
		P12 GB Innovation Ltd.	Ireland	2	N/A	N/A	N/A	2	**Task Owner:** - N/A **Task Contributor:** - 3.1, 3.2, 3.3, 3.4, 3.5
		P13 University of Luxembourg	Luxembourg	2	N/A	N/A	N/A	2	**Task Owner:** - N/A **Task Contributor:** - 3.1, 3.2, 3.3, 3.4, 3.5
		P14 Airholding - Embraer Research and Technology Europe	Portugal	2	N/A	N/A	N/A	2	**Task Owner:** - N/A **Task Contributor:** - 3.1, 3.2, 3.3, 3.4, 3.5
		P15 BERD	Portugal	2	N/A	N/A	N/A	2	**Task Owner:** - N/A **Task Contributor:** - 3.1, 3.2, 3.3, 3.4, 3.5
		P16 Exceuticals	Portugal	2	N/A	N/A	N/A	2	**Task Owner:** - N/A **Task Contributor:** - 3.1, 3.2, 3.3, 3.4, 3.5
		P17 Ausys Automation Systems	Slovakia	2	N/A	N/A	N/A	2	**Task Owner:** - N/A **Task Contributor:** - 3.1, 3.2, 3.3, 3.4, 3.5
		P18 Sabanci University	Turkey	2	N/A	N/A	N/A	2	**Task Owner:** - N/A **Task Contributor:** - 3.1, 3.2, 3.3, 3.4, 3.5
		P19 Edelweiss Connect GmbH	Switzerland	2	N/A	N/A	N/A	2	**Task Owner:** - N/A **Task Contributor:** - 3.1, 3.2, 3.3, 3.4, 3.5
		P20 University of Bremen	Germany	2	N/A	N/A	N/A	2	**Task Owner:** - N/A

Nº of Work Package	Lead partner	Partners involved	Country	Number of staff days					Role and tasks in the Work Package
				Category 1	Category 2	Category 3	Category 4	Total	
									Task Contributor: - 3.1, 3.2, 3.3, 3.4, 3.5
		P21 Impetus Solutions	India	2	N/A	N/A	N/A	2	**Task Owner:** - N/A **Task Contributor:** - 3.1, 3.2, 3.3, 3.4, 3.5
		P22 Kaunas University of Technology	Lithuania	2	N/A	N/A	N/A	2	**Task Owner:** - N/A **Task Contributor:** - 3.1, 3.2, 3.3, 3.4, 3.5
		P23 Vilnius University	Lithuania	2	N/A	N/A	N/A	2	**Task Owner:** - N/A **Task Contributor:** - 3.1, 3.2, 3.3, 3.4, 3.5
		P24 Rolls-Royce Deutschland Ltd & Co KG	Germany	2	N/A	N/A	N/A	2	**Task Owner:** - N/A **Task Contributor:** - 3.1, 3.2, 3.3, 3.4, 3.5
		P25 Entovation International Ltd.	USA	2	N/A	N/A	N/A	2	**Task Owner:** - N/A **Task Contributor:** - 3.1, 3.2, 3.3, 3.4, 3.5
		P26 Volvo Lastvagnar AB	Sweden	2	N/A	N/A	N/A	2	**Task Owner:** - N/A **Task Contributor:** - 3.1, 3.2, 3.3, 3.4, 3.5
		P27 Ariston Cavi	Italy	2	N/A	N/A	N/A	2	**Task Owner:** - N/A **Task Contributor:** - 3.1, 3.2, 3.3, 3.4, 3.5
		P28 Baladi Ltd	Israel	2	N/A	N/A	N/A	2	**Task Owner:** - N/A **Task Contributor:** - 3.1, 3.2, 3.3, 3.4, 3.5
	Subtotal			**272**	**0**	**0**	**0**	**272**	

Nº of Work Package	Lead partner	Partners involved	Country	Number of staff days					Role and tasks in the Work Package
				Category 1	Category 2	Category 3	Category 4	Total	
4		P1 Eurofocus International Consultants Ltd.	Germany	40	N/A	N/A	N/A	40	**Task Owner:** - N/A **Task Contributor:** - 4.1, 4.2, 4.3, 4.4
		P2 Tuke University	Slovakia	2	N/A	N/A	N/A	2	**Task Owner:** - N/A **Task Contributor:** - 4.1, 4.2, 4.3, 4.4
	Lead partner	P3 Riga Technical University	Latvia	120	N/A	N/A	N/A	120	**Task Owner:** - Overall Workpackage **Task Contributor:** - N/A
		P4 University of Lisbon	Portugal	2	N/A	N/A	N/A	2	**Task Owner:** - N/A **Task Contributor:** - 4.1, 4.2, 4.3, 4.4
		P5 ed-Media	Germany	2	N/A	N/A	N/A	2	**Task Owner:** - N/A **Task Contributor:** - 4.1, 4.2, 4.3, 4.4
		P6 Pasher & Associates	Israel	2	N/A	N/A	N/A	2	**Task Owner:** - N/A **Task Contributor:** - 4.1, 4.2, 4.3, 4.4
		P7 Eurecons Förderagentur GmbH	Germany	2	N/A	N/A	N/A	2	**Task Owner:** - N/A **Task Contributor:** - 4.1, 4.2, 4.3, 4.4
		P8 National University of Ireland Maynooth	Ireland	2	N/A	N/A	N/A	2	**Task Owner:** - N/A **Task Contributor:** - 4.1, 4.2, 4.3, 4.4
		P9 Technische Universität Berlin	Germany	2	N/A	N/A	N/A	2	**Task Owner:** - N/A **Task Contributor:** - 4.1, 4.2, 4.3, 4.4
		P10 University of Padova	Italy	2	N/A	N/A	N/A	2	**Task Owner:** - N/A

Nº of Work Package	Lead partner	Partners involved	Country	Number of staff days					Role and tasks in the Work Package
				Category 1	Category 2	Category 3	Category 4	Total	
									Task Contributor: - 4.1, 4.2, 4.3, 4.4
		P11 Hochschule Kaiserslautern	Germany	2	N/A	N/A	N/A	2	**Task Owner:** - N/A **Task Contributor:** - 4.1, 4.2, 4.3, 4.4
		P12 GB Innovation Ltd.	Ireland	2	N/A	N/A	N/A	2	**Task Owner:** - N/A **Task Contributor:** - 4.1, 4.2, 4.3, 4.4
		P13 University of Luxembourg	Luxembourg	2	N/A	N/A	N/A	2	**Task Owner:** - N/A **Task Contributor:** - 4.1, 4.2, 4.3, 4.4
		P14 Airholding - Embraer Research and Technology Europe	Portugal	2	N/A	N/A	N/A	2	**Task Owner:** - N/A **Task Contributor:** - 4.1, 4.2, 4.3, 4.4
		P15 BERD	Portugal	2	N/A	N/A	N/A	2	**Task Owner:** - N/A **Task Contributor:** - 4.1, 4.2, 4.3, 4.4
		P16 Exceuticals	Portugal	2	N/A	N/A	N/A	2	**Task Owner:** - N/A **Task Contributor:** - 4.1, 4.2, 4.3, 4.4
		P17 Ausys Automation Systems	Slovakia	2	N/A	N/A	N/A	2	**Task Owner:** - N/A **Task Contributor:** - 4.1, 4.2, 4.3, 4.4
		P18 Sabanci University	Turkey	2	N/A	N/A	N/A	2	**Task Owner:** - N/A **Task Contributor:** - 4.1, 4.2, 4.3, 4.4
		P19 Edelweiss Connect GmbH	Switzerland	2	N/A	N/A	N/A	2	**Task Owner:** - N/A **Task Contributor:** - 4.1, 4.2, 4.3, 4.4
		P20 University of Bremen	Germany	2	N/A	N/A	N/A	2	**Task Owner:** - N/A

Nº of Work Package	Lead partner	Partners involved	Country	Number of staff days					Role and tasks in the Work Package
				Category 1	Category 2	Category 3	Category 4	Total	
									Task Contributor: - 4.1, 4.2, 4.3, 4.4
		P21 Impetus Solutions	India	2	N/A	N/A	N/A	2	**Task Owner:** - N/A **Task Contributor:** - 4.1, 4.2, 4.3, 4.4
		P22 Kaunas University of Technology	Lithuania	2	N/A	N/A	N/A	2	**Task Owner:** - N/A **Task Contributor:** - 4.1, 4.2, 4.3, 4.4
		P23 Vilnius University	Lithuania	2	N/A	N/A	N/A	2	**Task Owner:** - N/A **Task Contributor:** - 4.1, 4.2, 4.3, 4.4
		P24 Rolls-Royce Deutschland Ltd & Co KG	Germany	2	N/A	N/A	N/A	2	**Task Owner:** - N/A **Task Contributor:** - 4.1, 4.2, 4.3, 4.4
		P25 Entovation International Ltd.	USA	2	N/A	N/A	N/A	2	**Task Owner:** - N/A **Task Contributor:** - 4.1, 4.2, 4.3, 4.4
		P26 Volvo Lastvagnar AB	Sweden	2	N/A	N/A	N/A	2	**Task Owner:** - N/A **Task Contributor:** - 4.1, 4.2, 4.3, 4.4
		P27 Ariston Cavi	Italy	2	N/A	N/A	N/A	2	**Task Owner:** - N/A **Task Contributor:** - 4.1, 4.2, 4.3, 4.4
		P28 Baladi Ltd	Israel	2	N/A	N/A	N/A	2	**Task Owner:** - N/A **Task Contributor:** - 4.1, 4.2, 4.3, 4.4
	Subtotal			**212**	**0**	**0**	**0**	**212**	

Nº of Work Package	Lead partner	Partners involved	Country	Number of staff days					Role and tasks in the Work Package
				Category 1	Category 2	Category 3	Category 4	Total	
5		P1 Eurofocus International Consultants Ltd.	Germany	40	N/A	N/A	N/A	40	**Task Owner:** - N/A **Task Contributor:** - 5.1, 5.2, 5.3, 5.4, 5.5, 5.6, 5.7, 5.8, 5.9, 5.10
		P2 Tuke University	Slovakia	2	N/A	N/A	N/A	2	**Task Owner:** - N/A **Task Contributor:** - 5.1, 5.2, 5.3, 5.4, 5.5, 5.6, 5.7, 5.8, 5.9, 5.10
		P3 Riga Technical University	Latvia	2	N/A	N/A	N/A	2	**Task Owner:** - N/A **Task Contributor:** - 5.1, 5.2, 5.3, 5.4, 5.5, 5.6, 5.7, 5.8, 5.9, 5.10
	Lead partner	P4 University of Lisbon	Portugal	100	N/A	N/A	N/A	100	**Task Owner:** - Overall Workpackage **Task Contributor:** - N/A
		P5 ed-Media	Germany	16	N/A	N/A	N/A	30	**Task Owner:** - N/A **Task Contributor:** - 5.1, 5.2, 5.3, 5.4, 5.5, 5.6, 5.7, 5.8, 5.9, 5.10
		P6 Pasher & Associates	Israel	2	N/A	N/A	N/A	2	**Task Owner:** - N/A **Task Contributor:** - 5.1, 5.2, 5.3, 5.4, 5.5, 5.6, 5.7, 5.8, 5.9, 5.10
		P7 Eurecons Förderagentur GmbH	Germany	2	N/A	N/A	N/A	2	**Task Owner:** - N/A **Task Contributor:** - 5.1, 5.2, 5.3, 5.4, 5.5, 5.6, 5.7, 5.8, 5.9, 5.10
		P8 National University of Ireland Maynooth	Ireland	2	N/A	N/A	N/A	2	**Task Owner:** - N/A **Task Contributor:** - 5.1, 5.2, 5.3, 5.4, 5.5, 5.6, 5.7, 5.8, 5.9, 5.10
		P9 Technische Universität Berlin	Germany	2	N/A	N/A	N/A	2	**Task Owner:** - N/A **Task Contributor:** - 5.1, 5.2, 5.3, 5.4, 5.5, 5.6, 5.7, 5.8, 5.9, 5.10
		P10 University of Padova	Italy	2	N/A	N/A	N/A	2	**Task Owner:** - N/A

Nº of Work Package	Lead partner	Partners involved	Country	Number of staff days					Role and tasks in the Work Package
				Category 1	Category 2	Category 3	Category 4	Total	
									Task Contributor: - 5.1, 5.2, 5.3, 5.4, 5.5, 5.6, 5.7, 5.8, 5.9, 5.10
		P11 Hochschule Kaiserslautern	Germany	16	N/A	N/A	N/A	2	**Task Owner:** - N/A **Task Contributor:** - 5.1, 5.2, 5.3, 5.4, 5.5, 5.6, 5.7, 5.8, 5.9, 5.10
		P12 GB Innovation Ltd.	Ireland	2	N/A	N/A	N/A	2	**Task Owner:** - N/A **Task Contributor:** - 5.1, 5.2, 5.3, 5.4, 5.5, 5.6, 5.7, 5.8, 5.9, 5.10
		P13 University of Luxembourg	Luxembourg	2	N/A	N/A	N/A	2	**Task Owner:** - N/A **Task Contributor:** - 5.1, 5.2, 5.3, 5.4, 5.5, 5.6, 5.7, 5.8, 5.9, 5.10
		P14 Airholding - Embraer Research and Technology Europe	Portugal	2	N/A	N/A	N/A	2	**Task Owner:** - N/A **Task Contributor:** - 5.1, 5.2, 5.3, 5.4, 5.5, 5.6, 5.7, 5.8, 5.9, 5.10
		P15 BERD	Portugal	2	N/A	N/A	N/A	2	**Task Owner:** - N/A **Task Contributor:** - 5.1, 5.2, 5.3, 5.4, 5.5, 5.6, 5.7, 5.8, 5.9, 5.10
		P16 Exceuticals	Portugal	2	N/A	N/A	N/A	2	**Task Owner:** - N/A **Task Contributor:** - 5.1, 5.2, 5.3, 5.4, 5.5, 5.6, 5.7, 5.8, 5.9, 5.10
		P17 Ausys Automation Systems	Slovakia	2	N/A	N/A	N/A	2	**Task Owner:** - N/A **Task Contributor:** - 5.1, 5.2, 5.3, 5.4, 5.5, 5.6, 5.7, 5.8, 5.9, 5.10
		P18 Sabanci University	Turkey	2	N/A	N/A	N/A	2	**Task Owner:** - N/A **Task Contributor:** - 5.1, 5.2, 5.3, 5.4, 5.5, 5.6, 5.7, 5.8, 5.9, 5.10
		P19 Edelweiss Connect GmbH	Switzerland	2	N/A	N/A	N/A	2	**Task Owner:** - N/A **Task Contributor:** - 5.1, 5.2, 5.3, 5.4, 5.5, 5.6, 5.7, 5.8, 5.9, 5.10
		P20 University of Bremen	Germany	2	N/A	N/A	N/A	2	**Task Owner:** - N/A

Nº of Work Package	Lead partner	Partners involved	Country	Number of staff days					Role and tasks in the Work Package
				Category 1	Category 2	Category 3	Category 4	Total	
									Task Contributor: - 5.1, 5.2, 5.3, 5.4, 5.5, 5.6, 5.7, 5.8, 5.9, 5.10
		P21 Impetus Solutions	India	1	N/A	N/A	N/A	1	**Task Owner:** - N/A **Task Contributor:** - 5.1, 5.2, 5.3, 5.4, 5.5, 5.6, 5.7, 5.8, 5.9, 5.10
		P22 Kaunas University of Technology	Lithuania	2	N/A	N/A	N/A	2	**Task Owner:** - N/A **Task Contributor:** - 5.1, 5.2, 5.3, 5.4, 5.5, 5.6, 5.7, 5.8, 5.9, 5.10
		P23 Vilnius University	Lithuania	2	N/A	N/A	N/A	2	**Task Owner:** - N/A **Task Contributor:** - 5.1, 5.2, 5.3, 5.4, 5.5, 5.6, 5.7, 5.8, 5.9, 5.10
		P24 Rolls-Royce Deutschland Ltd & Co KG	Germany	2	N/A	N/A	N/A	2	**Task Owner:** - N/A **Task Contributor:** - 5.1, 5.2, 5.3, 5.4, 5.5, 5.6, 5.7, 5.8, 5.9, 5.10
		P25 Entovation International Ltd.	USA	2	N/A	N/A	N/A	2	**Task Owner:** - N/A **Task Contributor:** - 5.1, 5.2, 5.3, 5.4, 5.5, 5.6, 5.7, 5.8, 5.9, 5.10
		P26 Volvo Lastvagnar AB	Sweden	2	N/A	N/A	N/A	2	**Task Owner:** - N/A **Task Contributor:** - 5.1, 5.2, 5.3, 5.4, 5.5, 5.6, 5.7, 5.8, 5.9, 5.10
		P27 Ariston Cavi	Italy	2	N/A	N/A	N/A	2	**Task Owner:** - N/A **Task Contributor:** - 5.1, 5.2, 5.3, 5.4, 5.5, 5.6, 5.7, 5.8, 5.9, 5.10
		P28 Baladi Ltd	Israel	2	N/A	N/A	N/A	2	**Task Owner:** - N/A **Task Contributor:** - 5.1, 5.2, 5.3, 5.4, 5.5, 5.6, 5.7, 5.8, 5.9, 5.10
	Subtotal			**212**	**0**	**0**	**0**	**212**	

Nº of Work Package	Lead partner	Partners involved	Country	Number of staff days					Role and tasks in the Work Package
				Category 1	Category 2	Category 3	Category 4	Total	
6		P1 Eurofocus International Consultants Ltd.	Germany	40	N/A	N/A	N/A	40	**Task Owner:** - N/A **Task Contributor:** - 6.1, 6.2, 6.3, 6.4, 6.5, 6.6, 6.7, 6.8, 6.9, 6.10, 6.11, 6.12
		P2 Tuke University	Slovakia	2	N/A	N/A	N/A	2	**Task Owner:** - N/A **Task Contributor:** - 6.1, 6.2, 6.3, 6.4, 6.5, 6.6, 6.7, 6.8, 6.9, 6.10, 6.11, 6.12
		P3 Riga Technical University	Latvia	2	N/A	N/A	N/A	2	**Task Owner:** - N/A **Task Contributor:** - 6.1, 6.2, 6.3, 6.4, 6.5, 6.6, 6.7, 6.8, 6.9, 6.10, 6.11, 6.12
		P4 University of Lisbon	Portugal	2	N/A	N/A	N/A	2	**Task Owner:** - N/A **Task Contributor:** - 6.1, 6.2, 6.3, 6.4, 6.5, 6.6, 6.7, 6.8, 6.9, 6.10, 6.11, 6.12
	Lead partner	P5 ed-Media	Germany	268	N/A	N/A	N/A	268	**Task Owner:** - Overall Workpackage **Task Contributor:** - N/A
		P6 Pasher & Associates	Israel	2	N/A	N/A	N/A	2	**Task Owner:** - N/A **Task Contributor:** - 6.1, 6.2, 6.3, 6.4, 6.5, 6.6, 6.7, 6.8, 6.9, 6.10, 6.11, 6.12
		P7 Eurecons Förderagentur GmbH	Germany	2	N/A	N/A	N/A	2	**Task Owner:** - N/A **Task Contributor:** - 6.1, 6.2, 6.3, 6.4, 6.5, 6.6, 6.7, 6.8, 6.9, 6.10, 6.11, 6.12
		P8 National University of Ireland Maynooth	Ireland	2	N/A	N/A	N/A	2	**Task Owner:** - N/A **Task Contributor:** - 6.1, 6.2, 6.3, 6.4, 6.5, 6.6, 6.7, 6.8, 6.9, 6.10, 6.11, 6.12

Nº of Work Package	Lead partner	Partners involved	Country	Number of staff days					Role and tasks in the Work Package
				Category 1	Category 2	Category 3	Category 4	Total	
		P9 Technische Universität Berlin	Germany	2	N/A	N/A	N/A	2	**Task Owner:** - N/A **Task Contributor:** - 6.1, 6.2, 6.3, 6.4, 6.5, 6.6, 6.7, 6.8, 6.9, 6.10, 6.11, 6.12
		P10 University of Padova	Italy	2	N/A	N/A	N/A	2	**Task Owner:** - N/A **Task Contributor:** - 6.1, 6.2, 6.3, 6.4, 6.5, 6.6, 6.7, 6.8, 6.9, 6.10, 6.11, 6.12
		P11 Hochschule Kaiserslautern	Germany	268	N/A	N/A	N/A	268	**Task Owner:** - 6.9, 6.10, 6.11 **Task Contributor:** - 6.1, 6.2, 6.3, 6.4, 6.5, 6.6, 6.7, 6.8, 6.12
		P12 GB Innovation Ltd.	Ireland	2	N/A	N/A	N/A	2	**Task Owner:** - N/A **Task Contributor:** - 6.1, 6.2, 6.3, 6.4, 6.5, 6.6, 6.7, 6.8, 6.9, 6.10, 6.11, 6.12
		P13 University of Luxembourg	Luxembourg	2	N/A	N/A	N/A	2	**Task Owner:** - N/A **Task Contributor:** - 6.1, 6.2, 6.3, 6.4, 6.5, 6.6, 6.7, 6.8, 6.9, 6.10, 6.11, 6.12
		P14 Airholding - Embraer Research and Technology Europe	Portugal	2	N/A	N/A	N/A	2	**Task Owner:** - N/A **Task Contributor:** - 6.1, 6.2, 6.3, 6.4, 6.5, 6.6, 6.7, 6.8, 6.9, 6.10, 6.11, 6.12
		P15 BERD	Portugal	2	N/A	N/A	N/A	2	**Task Owner:** - N/A **Task Contributor:** - 6.1, 6.2, 6.3, 6.4, 6.5, 6.6, 6.7, 6.8, 6.9, 6.10, 6.11, 6.12
		P16 Exceuticals	Portugal	2	N/A	N/A	N/A	2	**Task Owner:** - N/A **Task Contributor:** - 6.1, 6.2, 6.3, 6.4, 6.5, 6.6, 6.7, 6.8, 6.9, 6.10, 6.11, 6.12

Nº of Work Package	Lead partner	Partners involved	Country	Number of staff days					Role and tasks in the Work Package
				Category 1	Category 2	Category 3	Category 4	Total	
		P17 Ausys Automation Systems	Slovakia	2	N/A	N/A	N/A	2	**Task Owner:** - N/A **Task Contributor:** - 6.1, 6.2, 6.3, 6.4, 6.5, 6.6, 6.7, 6.8, 6.9, 6.10, 6.11, 6.12
		P18 Sabanci University	Turkey	2	N/A	N/A	N/A	2	**Task Owner:** - N/A **Task Contributor:** - 6.1, 6.2, 6.3, 6.4, 6.5, 6.6, 6.7, 6.8, 6.9, 6.10, 6.11, 6.12
		P19 Edelweiss Connect GmbH	Switzerland	2	N/A	N/A	N/A	2	**Task Owner:** - N/A **Task Contributor:** - 6.1, 6.2, 6.3, 6.4, 6.5, 6.6, 6.7, 6.8, 6.9, 6.10, 6.11, 6.12
		P20 University of Bremen	Germany	2	N/A	N/A	N/A	2	**Task Owner:** - N/A **Task Contributor:** - 6.1, 6.2, 6.3, 6.4, 6.5, 6.6, 6.7, 6.8, 6.9, 6.10, 6.11, 6.12
		P21 Impetus Solutions	India	100	N/A	N/A	N/A	100	**Task Owner:** - Technical Ownership: 6.5 **Task Contributor:** - 6.1, 6.2, 6.3, 6.4, 6.6, 6.7, 6.8, 6.9, 6.10, 6.11, 6.12
		P22 Kaunas University of Technology	Lithuania	2	N/A	N/A	N/A	2	**Task Owner:** - N/A **Task Contributor:** - 6.1, 6.2, 6.3, 6.4, 6.5, 6.6, 6.7, 6.8, 6.9, 6.10, 6.11, 6.12
		P23 Vilnius University	Lithuania	50	N/A	N/A	N/A	50	**Task Owner:** - N/A **Task Contributor:** - 6.1, 6.2, 6.3, 6.4, 6.5, 6.6, 6.7, 6.8, 6.9, 6.10, 6.11, 6.12
		P24 Rolls-Royce Deutschland Ltd & Co KG	Germany	2	N/A	N/A	N/A	2	**Task Owner:** - N/A **Task Contributor:** - 6.1, 6.2, 6.3, 6.4, 6.5, 6.6, 6.7, 6.8, 6.9, 6.10, 6.11, 6.12

Nº of Work Package	Lead partner	Partners involved	Country	Number of staff days					Role and tasks in the Work Package
				Category 1	Category 2	Category 3	Category 4	Total	
		P25 Entovation International Ltd.	USA	2	N/A	N/A	N/A	2	**Task Owner:** - N/A **Task Contributor:** - 6.1, 6.2, 6.3, 6.4, 6.5, 6.6, 6.7, 6.8, 6.9, 6.10, 6.11, 6.12
		P26 Volvo Lastvagnar AB	Sweden	2	N/A	N/A	N/A	2	**Task Owner:** - N/A **Task Contributor:** - 6.1, 6.2, 6.3, 6.4, 6.5, 6.6, 6.7, 6.8, 6.9, 6.10, 6.11, 6.12
		P27 Ariston Cavi	Italy	2	N/A	N/A	N/A	2	**Task Owner:** - N/A **Task Contributor:** - 6.1, 6.2, 6.3, 6.4, 6.5, 6.6, 6.7, 6.8, 6.9, 6.10, 6.11, 6.12
		P28 Baladi Ltd	Israel	2	N/A	N/A	N/A	2	**Task Owner:** - N/A **Task Contributor:** - 6.1, 6.2, 6.3, 6.4, 6.5, 6.6, 6.7, 6.8, 6.9, 6.10, 6.11, 6.12
	Subtotal			**771**	**0**	**0**	**0**	**771**	

Nº of Work Package	Lead partner	Partners involved	Country	Number of staff days					Role and tasks in the Work Package
				Category 1	Category 2	Category 3	Category 4	Total	
7		P1 Eurofocus International Consultants Ltd.	Germany	40	N/A	N/A	N/A	40	**Task Owner:** - N/A **Task Contributor:** - 7.1, 7.2, 7.3, 7.4, 7.5, 7.6
		P2 Tuke University	Slovakia	2	N/A	N/A	N/A	2	**Task Owner:** - N/A **Task Contributor:** - 7.1, 7.2, 7.3, 7.4, 7.5, 7.6
		P3 Riga Technical University	Latvia	2	N/A	N/A	N/A	2	**Task Owner:** - N/A **Task Contributor:** - 7.1, 7.2, 7.3, 7.4, 7.5, 7.6
		P4 University of Lisbon	Portugal	2	N/A	N/A	N/A	2	**Task Owner:** - N/A **Task Contributor:** - 7.1, 7.2, 7.3, 7.4, 7.5, 7.6
		P5 ed-Media	Germany	2	N/A	N/A	N/A	2	**Task Owner:** - N/A **Task Contributor:** - 7.1, 7.2, 7.3, 7.4, 7.5, 7.6
	Lead partner	P6 Pasher & Associates	Israel	200	N/A	N/A	N/A	200	**Task Owner:** - Overall Workpackage **Task Contributor:** - N/A
		P7 Eurecons Förderagentur GmbH	Germany	2	N/A	N/A	N/A	2	**Task Owner:** - N/A **Task Contributor:** - 7.1, 7.2, 7.3, 7.4, 7.5, 7.6
		P8 National University of Ireland Maynooth	Ireland	2	N/A	N/A	N/A	2	**Task Owner:** - N/A **Task Contributor:** - 7.1, 7.2, 7.3, 7.4, 7.5, 7.6
		P9 Technische Universität Berlin	Germany	2	N/A	N/A	N/A	2	**Task Owner:** - N/A **Task Contributor:** - 7.1, 7.2, 7.3, 7.4, 7.5, 7.6
		P10 University of Padova	Italy	2	N/A	N/A	N/A	2	**Task Owner:** - N/A

Nº of Work Package	Lead partner	Partners involved	Country	Number of staff days					Role and tasks in the Work Package
				Category 1	Category 2	Category 3	Category 4	Total	
									Task Contributor: - 7.1, 7.2, 7.3, 7.4, 7.5, 7.6
		P11 Hochschule Kaiserslautern	Germany	2	N/A	N/A	N/A	2	**Task Owner:** - N/A **Task Contributor:** - 7.1, 7.2, 7.3, 7.4, 7.5, 7.6
		P12 GB Innovation Ltd.	Ireland	2	N/A	N/A	N/A	2	**Task Owner:** - N/A **Task Contributor:** - 7.1, 7.2, 7.3, 7.4, 7.5, 7.6
		P13 University of Luxembourg	Luxembourg	2	N/A	N/A	N/A	2	**Task Owner:** - N/A **Task Contributor:** - 7.1, 7.2, 7.3, 7.4, 7.5, 7.6
		P14 Airholding - Embraer Research and Technology Europe	Portugal	2	N/A	N/A	N/A	2	**Task Owner:** - N/A **Task Contributor:** - 7.1, 7.2, 7.3, 7.4, 7.5, 7.6
		P15 BERD	Portugal	2	N/A	N/A	N/A	2	**Task Owner:** - N/A **Task Contributor:** - 7.1, 7.2, 7.3, 7.4, 7.5, 7.6
		P16 Exceuticals	Portugal	2	N/A	N/A	N/A	2	**Task Owner:** - N/A **Task Contributor:** - 7.1, 7.2, 7.3, 7.4, 7.5, 7.6
		P17 Ausys Automation Systems	Slovakia	2	N/A	N/A	N/A	2	**Task Owner:** - N/A **Task Contributor:** - 7.1, 7.2, 7.3, 7.4, 7.5, 7.6
		P18 Sabanci University	Turkey	2	N/A	N/A	N/A	2	**Task Owner:** - N/A **Task Contributor:** - 7.1, 7.2, 7.3, 7.4, 7.5, 7.6
		P19 Edelweiss Connect GmbH	Switzerland	2	N/A	N/A	N/A	2	**Task Owner:** - N/A **Task Contributor:** - 7.1, 7.2, 7.3, 7.4, 7.5, 7.6
		P20 University of Bremen	Germany	2	N/A	N/A	N/A	2	**Task Owner:** - N/A

Nº of Work Package	Lead partner	Partners involved	Country	Number of staff days					Role and tasks in the Work Package
				Category 1	Category 2	Category 3	Category 4	Total	
									Task Contributor: - 7.1, 7.2, 7.3, 7.4, 7.5, 7.6
		P21 Impetus Solutions	India	100	N/A	N/A	N/A	100	**Task Owner:** - 7.1, 7.6 **Task Contributor:** - 7.2, 7.3, 7.4, 7.5
		P22 Kaunas University of Technology	Lithuania	2	N/A	N/A	N/A	2	**Task Owner:** - N/A **Task Contributor:** - 7.1, 7.2, 7.3, 7.4, 7.5, 7.6
		P23 Vilnius University	Lithuania	2	N/A	N/A	N/A	2	**Task Owner:** - N/A **Task Contributor:** - 7.1, 7.2, 7.3, 7.4, 7.5, 7.6
		P24 Rolls-Royce Deutschland Ltd & Co KG	Germany	2	N/A	N/A	N/A	2	**Task Owner:** - N/A **Task Contributor:** - 7.1, 7.2, 7.3, 7.4, 7.5, 7.6
		P25 Entovation International Ltd.	USA	2	N/A	N/A	N/A	2	**Task Owner:** - N/A **Task Contributor:** - 7.1, 7.2, 7.3, 7.4, 7.5, 7.6
		P26 Volvo Lastvagnar AB	Sweden	2	N/A	N/A	N/A	2	**Task Owner:** - N/A **Task Contributor:** - 7.1, 7.2, 7.3, 7.4, 7.5, 7.6
		P27 Ariston Cavi	Italy	2	N/A	N/A	N/A	2	**Task Owner:** - N/A **Task Contributor:** - 7.1, 7.2, 7.3, 7.4, 7.5, 7.6
		P28 Baladi Ltd	Israel	2	N/A	N/A	N/A	2	**Task Owner:** - N/A **Task Contributor:** - 7.1, 7.2, 7.3, 7.4, 7.5, 7.6
	Subtotal			**390**	**0**	**0**	**0**	**390**	

Nº of Work Package	Lead partner	Partners involved	Country	Number of staff days					Role and tasks in the Work Package
				Category 1	Category 2	Category 3	Category 4	Total	
8	**Lead partner**	P1 Eurofocus International Consultants Ltd.	Germany	140	N/A	N/A	N/A	140	**Task Owner:** - Overall Workpackage **Task Contributor:** - N/A
		P2 Tuke University	Slovakia	2	N/A	N/A	N/A	2	**Task Owner:** - N/A **Task Contributor:** - 8.1, 8.2, 8.3, 8.4, 8.5, 8.6, 8.7, 8.8, 8.9, 8.10
		P3 Riga Technical University	Latvia	2	N/A	N/A	N/A	2	**Task Owner:** - N/A **Task Contributor:** - 8.1, 8.2, 8.3, 8.4, 8.5, 8.6, 8.7, 8.8, 8.9, 8.10
		P4 University of Lisbon	Portugal	2	N/A	N/A	N/A	2	**Task Owner:** - N/A **Task Contributor:** - 8.1, 8.2, 8.3, 8.4, 8.5, 8.6, 8.7, 8.8, 8.9, 8.10
		P5 ed-Media	Germany	2	N/A	N/A	N/A	2	**Task Owner:** - N/A **Task Contributor:** - 8.1, 8.2, 8.3, 8.4, 8.5, 8.6, 8.7, 8.8, 8.9, 8.10
		P6 Pasher & Associates	Israel	2	N/A	N/A	N/A	2	**Task Owner:** - N/A **Task Contributor:** - 8.1, 8.2, 8.3, 8.4, 8.5, 8.6, 8.7, 8.8, 8.9, 8.10
		P7 Eurecons Förderagentur GmbH	Germany	2	N/A	N/A	N/A	2	**Task Owner:** - N/A **Task Contributor:** - 8.1, 8.2, 8.3, 8.4, 8.5, 8.6, 8.7, 8.8, 8.9, 8.10
		P8 National University of Ireland Maynooth	Ireland	2	N/A	N/A	N/A	2	**Task Owner:** - N/A **Task Contributor:** - 8.1, 8.2, 8.3, 8.4, 8.5, 8.6, 8.7, 8.8, 8.9, 8.10
		P9 Technische Universität Berlin	Germany	2	N/A	N/A	N/A	2	**Task Owner:** - N/A **Task Contributor:** - 8.1, 8.2, 8.3, 8.4, 8.5, 8.6, 8.7, 8.8, 8.9, 8.10
		P10 University of Padova	Italy	2	N/A	N/A	N/A	2	**Task Owner:** - N/A **Task Contributor:** - 8.1, 8.2, 8.3, 8.4, 8.5, 8.6, 8.7, 8.8, 8.9, 8.10

Nº of Work Package	Lead partner	Partners involved	Country	Number of staff days					Role and tasks in the Work Package
				Category 1	Category 2	Category 3	Category 4	Total	
		P11 Hochschule Kaiserslautern	Germany	2	N/A	N/A	N/A	2	**Task Owner:** - N/A **Task Contributor:** - 8.1, 8.2, 8.3, 8.4, 8.5, 8.6, 8.7, 8.8, 8.9, 8.10
		P12 GB Innovation Ltd.	Ireland	2	N/A	N/A	N/A	2	**Task Owner:** - N/A **Task Contributor:** - 8.1, 8.2, 8.3, 8.4, 8.5, 8.6, 8.7, 8.8, 8.9, 8.10
		P13 University of Luxembourg	Luxembourg	2	N/A	N/A	N/A	2	**Task Owner:** - N/A **Task Contributor:** - 8.1, 8.2, 8.3, 8.4, 8.5, 8.6, 8.7, 8.8, 8.9, 8.10
		P14 Airholding - Embraer Research and Technology Europe	Portugal	2	N/A	N/A	N/A	2	**Task Owner:** - N/A **Task Contributor:** - 8.1, 8.2, 8.3, 8.4, 8.5, 8.6, 8.7, 8.8, 8.9, 8.10
		P15 BERD	Portugal	2	N/A	N/A	N/A	2	**Task Owner:** - N/A **Task Contributor:** - 8.1, 8.2, 8.3, 8.4, 8.5, 8.6, 8.7, 8.8, 8.9, 8.10
		P16 Exceuticals	Portugal	2	N/A	N/A	N/A	2	**Task Owner:** - N/A **Task Contributor:** - 8.1, 8.2, 8.3, 8.4, 8.5, 8.6, 8.7, 8.8, 8.9, 8.10
		P17 Ausys Automation Systems	Slovakia	2	N/A	N/A	N/A	2	**Task Owner:** - N/A **Task Contributor:** - 8.1, 8.2, 8.3, 8.4, 8.5, 8.6, 8.7, 8.8, 8.9, 8.10
		P18 Sabanci University	Turkey	2	N/A	N/A	N/A	2	**Task Owner:** - N/A **Task Contributor:** - 8.1, 8.2, 8.3, 8.4, 8.5, 8.6, 8.7, 8.8, 8.9, 8.10
		P19 Edelweiss Connect GmbH	Switzerland	2	N/A	N/A	N/A	2	**Task Owner:** - N/A **Task Contributor:** - 8.1, 8.2, 8.3, 8.4, 8.5, 8.6, 8.7, 8.8, 8.9, 8.10
		P20 University of Bremen	Germany	2	N/A	N/A	N/A	2	**Task Owner:** - N/A **Task Contributor:** - 8.1, 8.2, 8.3, 8.4, 8.5, 8.6, 8.7, 8.8, 8.9, 8.10

Nº of Work Package	Lead partner	Partners involved	Country	Number of staff days					Role and tasks in the Work Package
				Category 1	Category 2	Category 3	Category 4	Total	
		P21 Impetus Solutions	India	100	N/A	N/A	N/A	100	**Task Owner:** - Technical Ownership: 8.1, 8.2, 8.3, 8.6 **Task Contributor:** - 8.1, 8.2, 8.3, 8.4, 8.5, 8.6, 8.7, 8.8, 8.9, 8.10
		P22 Kaunas University of Technology	Lithuania	2	N/A	N/A	N/A	2	**Task Owner:** - N/A **Task Contributor:** - 8.1, 8.2, 8.3, 8.4, 8.5, 8.6, 8.7, 8.8, 8.9, 8.10
		P23 Vilnius University	Lithuania	2	N/A	N/A	N/A	2	**Task Owner:** - N/A **Task Contributor:** - 8.1, 8.2, 8.3, 8.4, 8.5, 8.6, 8.7, 8.8, 8.9, 8.10
		P24 Rolls-Royce Deutschland Ltd & Co KG	Germany	2	N/A	N/A	N/A	2	**Task Owner:** - N/A **Task Contributor:** - 8.1, 8.2, 8.3, 8.4, 8.5, 8.6, 8.7, 8.8, 8.9, 8.10
		P25 Entovation International Ltd.	USA	2	N/A	N/A	N/A	2	**Task Owner:** - N/A **Task Contributor:** - 8.1, 8.2, 8.3, 8.4, 8.5, 8.6, 8.7, 8.8, 8.9, 8.10
		P26 Volvo Lastvagnar AB	Sweden	2	N/A	N/A	N/A	2	**Task Owner:** - N/A **Task Contributor:** - 8.1, 8.2, 8.3, 8.4, 8.5, 8.6, 8.7, 8.8, 8.9, 8.10
		P27 Ariston Cavi	Italy	2	N/A	N/A	N/A	2	**Task Owner:** - N/A **Task Contributor:** - 8.1, 8.2, 8.3, 8.4, 8.5, 8.6, 8.7, 8.8, 8.9, 8.10
		P28 Baladi Ltd	Israel	2	N/A	N/A	N/A	2	**Task Owner:** - N/A **Task Contributor:** - 8.1, 8.2, 8.3, 8.4, 8.5, 8.6, 8.7, 8.8, 8.9, 8.10
	Subtotal			**292**	**0**	**0**	**0**	**292**	

Nº of Work Package	Lead partner	Partners involved	Country	Number of staff days					Role and tasks in the Work Package
				Category 1	Category 2	Category 3	Category 4	Total	
9		P1 Eurofocus International Consultants Ltd.	Germany	20	N/A	N/A	N/A	20	**Task Owner:** - N/A **Task Contributor:** - 9.1, 9.2, 9.3, 9.4, 9.5, 9.6, 9.7, 9.8, 9.9, 9.10
		P2 Tuke University	Slovakia	2	N/A	N/A	N/A	2	**Task Owner:** - N/A **Task Contributor:** - 9.1, 9.2, 9.3, 9.4, 9.5, 9.6, 9.7, 9.8, 9.9, 9.10
		P3 Riga Technical University	Latvia	2	N/A	N/A	N/A	2	**Task Owner:** - N/A **Task Contributor:** - 9.1, 9.2, 9.3, 9.4, 9.5, 9.6, 9.7, 9.8, 9.9, 9.10
		P4 University of Lisbon	Portugal	2	N/A	N/A	N/A	2	**Task Owner:** - N/A **Task Contributor:** - 9.1, 9.2, 9.3, 9.4, 9.5, 9.6, 9.7, 9.8, 9.9, 9.10
		P5 ed-Media	Germany	2	N/A	N/A	N/A	2	**Task Owner:** - N/A **Task Contributor:** - 9.1, 9.2, 9.3, 9.4, 9.5, 9.6, 9.7, 9.8, 9.9, 9.10
		P6 Pasher & Associates	Israel	2	N/A	N/A	N/A	2	**Task Owner:** - N/A **Task Contributor:** - 9.1, 9.2, 9.3, 9.4, 9.5, 9.6, 9.7, 9.8, 9.9, 9.10
	Lead partner	P7 Eurecons Förderagentur GmbH	Germany	40	N/A	N/A	N/A	40	**Task Owner:** - Overall Workpackage **Task Contributor:** - N/A
		P8 National University of Ireland Maynooth	Ireland	2	N/A	N/A	N/A	2	**Task Owner:** - N/A **Task Contributor:** - 9.1, 9.2, 9.3, 9.4, 9.5, 9.6, 9.7, 9.8, 9.9, 9.10
		P9 Technische Universität Berlin	Germany	2	N/A	N/A	N/A	2	**Task Owner:** - N/A **Task Contributor:** - 9.1, 9.2, 9.3, 9.4, 9.5, 9.6, 9.7, 9.8, 9.9, 9.10
		P10 University of Padova	Italy	2	N/A	N/A	N/A	2	**Task Owner:** - N/A **Task Contributor:** - 9.1, 9.2, 9.3, 9.4, 9.5, 9.6, 9.7, 9.8, 9.9, 9.10

Nº of Work Package	Lead partner	Partners involved	Country	Number of staff days					Role and tasks in the Work Package
				Category 1	Category 2	Category 3	Category 4	Total	
		P11 Hochschule Kaiserslautern	Germany	2	N/A	N/A	N/A	2	**Task Owner:** - N/A **Task Contributor:** - 9.1, 9.2, 9.3, 9.4, 9.5, 9.6, 9.7, 9.8, 9.9, 9.10
		P12 GB Innovation Ltd.	Ireland	2	N/A	N/A	N/A	2	**Task Owner:** - N/A **Task Contributor:** - 9.1, 9.2, 9.3, 9.4, 9.5, 9.6, 9.7, 9.8, 9.9, 9.10
		P13 University of Luxembourg	Luxembourg	2	N/A	N/A	N/A	2	**Task Owner:** - N/A **Task Contributor:** - 9.1, 9.2, 9.3, 9.4, 9.5, 9.6, 9.7, 9.8, 9.9, 9.10
		P14 Airholding - Embraer Research and Technology Europe	Portugal	2	N/A	N/A	N/A	2	**Task Owner:** - N/A **Task Contributor:** - 9.1, 9.2, 9.3, 9.4, 9.5, 9.6, 9.7, 9.8, 9.9, 9.10
		P15 BERD	Portugal	2	N/A	N/A	N/A	2	**Task Owner:** - N/A **Task Contributor:** - 9.1, 9.2, 9.3, 9.4, 9.5, 9.6, 9.7, 9.8, 9.9, 9.10
		P16 Exceuticals	Portugal	2	N/A	N/A	N/A	2	**Task Owner:** - N/A **Task Contributor:** - 9.1, 9.2, 9.3, 9.4, 9.5, 9.6, 9.7, 9.8, 9.9, 9.10
		P17 Ausys Automation Systems	Slovakia	2	N/A	N/A	N/A	2	**Task Owner:** - N/A **Task Contributor:** - 9.1, 9.2, 9.3, 9.4, 9.5, 9.6, 9.7, 9.8, 9.9, 9.10
		P18 Sabanci University	Turkey	2	N/A	N/A	N/A	2	**Task Owner:** - N/A **Task Contributor:** - 9.1, 9.2, 9.3, 9.4, 9.5, 9.6, 9.7, 9.8, 9.9, 9.10
		P19 Edelweiss Connect GmbH	Switzerland	2	N/A	N/A	N/A	2	**Task Owner:** - N/A **Task Contributor:** - 9.1, 9.2, 9.3, 9.4, 9.5, 9.6, 9.7, 9.8, 9.9, 9.10
		P20 University of Bremen	Germany	2	N/A	N/A	N/A	2	**Task Owner:** - N/A **Task Contributor:** - 9.1, 9.2, 9.3, 9.4, 9.5, 9.6, 9.7, 9.8, 9.9, 9.10

Nº of Work Package	Lead partner	Partners involved	Country	Number of staff days					Role and tasks in the Work Package
				Category 1	Category 2	Category 3	Category 4	Total	
		P21 Impetus Solutions	India	100	N/A	N/A	N/A	100	**Task Owner:** - Technical Integration: 9.8 **Task Contributor:** - 9.1, 9.2, 9.3, 9.4, 9.5, 9.6, 9.7, 9.8, 9.9, 9.10
		P22 Kaunas University of Technology	Lithuania	2	N/A	N/A	N/A	2	**Task Owner:** - N/A **Task Contributor:** - 9.1, 9.2, 9.3, 9.4, 9.5, 9.6, 9.7, 9.8, 9.9, 9.10
		P23 Vilnius University	Lithuania	2	N/A	N/A	N/A	2	**Task Owner:** - N/A **Task Contributor:** - 9.1, 9.2, 9.3, 9.4, 9.5, 9.6, 9.7, 9.8, 9.9, 9.10
		P24 Rolls-Royce Deutschland Ltd & Co KG	Germany	2	N/A	N/A	N/A	2	**Task Owner:** - N/A **Task Contributor:** - 9.1, 9.2, 9.3, 9.4, 9.5, 9.6, 9.7, 9.8, 9.9, 9.10
		P25 Entovation International Ltd.	USA	30	N/A	N/A	N/A	30	**Task Owner:** - 9.8 **Task Contributor:** - 9.1, 9.2, 9.3, 9.4, 9.5, 9.6, 9.7, 9.9, 9.10
		P26 Volvo Lastvagnar AB	Sweden	2	N/A	N/A	N/A	2	**Task Owner:** - N/A **Task Contributor:** - 9.1, 9.2, 9.3, 9.4, 9.5, 9.6, 9.7, 9.8, 9.9, 9.10
		P27 Ariston Cavi	Italy	2	N/A	N/A	N/A	2	**Task Owner:** - N/A **Task Contributor:** - 9.1, 9.2, 9.3, 9.4, 9.5, 9.6, 9.7, 9.8, 9.9, 9.10
		P28 Baladi Ltd	Israel	2	N/A	N/A	N/A	2	**Task Owner:** - N/A **Task Contributor:** - 9.1, 9.2, 9.3, 9.4, 9.5, 9.6, 9.7, 9.8, 9.9, 9.10
	Subtotal			**238**	**0**	**0**	**0**	**238**	

Nº of Work Package	Lead partner	Partners involved	Country	Number of staff days					Role and tasks in the Work Package
				Category 1	Category 2	Category 3	Category 4	Total	
10		P1 Eurofocus International Consultants Ltd.	Germany	20	N/A	N/A	N/A	20	**Task Owner:** - N/A **Task Contributor:** - 10.1, 10.2, 10.3, 10.4, 10.5, 10.6, 10.7, 10.8
		P2 Tuke University	Slovakia	2	N/A	N/A	N/A	2	**Task Owner:** - N/A **Task Contributor:** - 10.1, 10.2, 10.3, 10.4, 10.5, 10.6, 10.7, 10.8
		P3 Riga Technical University	Latvia	2	N/A	N/A	N/A	2	**Task Owner:** - N/A **Task Contributor:** - 10.1, 10.2, 10.3, 10.4, 10.5, 10.6, 10.7, 10.8
	Lead partner	P4 University of Lisbon	Portugal	115	N/A	N/A	N/A	115	**Task Owner:** - Overall Workpackage **Task Contributor:** - N/A
		P5 ed-Media	Germany	2	N/A	N/A	N/A	2	**Task Owner:** - N/A **Task Contributor:** - 10.1, 10.2, 10.3, 10.4, 10.5, 10.6, 10.7, 10.8
		P6 Pasher & Associates	Israel	2	N/A	N/A	N/A	2	**Task Owner:** - N/A **Task Contributor:** - 10.1, 10.2, 10.3, 10.4, 10.5, 10.6, 10.7, 10.8
		P7 Eurecons Förderagentur GmbH	Germany	2	N/A	N/A	N/A	2	**Task Owner:** - N/A **Task Contributor:** - 10.1, 10.2, 10.3, 10.4, 10.5, 10.6, 10.7, 10.8
		P8 National University of Ireland Maynooth	Ireland	2	N/A	N/A	N/A	2	**Task Owner:** - N/A **Task Contributor:** - 10.1, 10.2, 10.3, 10.4, 10.5, 10.6, 10.7, 10.8
		P9 Technische Universität Berlin	Germany	2	N/A	N/A	N/A	2	**Task Owner:** - N/A **Task Contributor:** - 10.1, 10.2, 10.3, 10.4, 10.5, 10.6, 10.7, 10.8
		P10 University of Padova	Italy	2	N/A	N/A	N/A	2	**Task Owner:** - N/A **Task Contributor:** - 10.1, 10.2, 10.3, 10.4, 10.5, 10.6, 10.7, 10.8

Nº of Work Package	Lead partner	Partners involved	Country	Number of staff days					Role and tasks in the Work Package
				Category 1	Category 2	Category 3	Category 4	Total	
		P11 Hochschule Kaiserslautern	Germany	2	N/A	N/A	N/A	2	**Task Owner:** - N/A **Task Contributor:** - 10.1, 10.2, 10.3, 10.4, 10.5, 10.6, 10.7, 10.8
		P12 GB Innovation Ltd.	Ireland	2	N/A	N/A	N/A	2	**Task Owner:** - N/A **Task Contributor:** - 10.1, 10.2, 10.3, 10.4, 10.5, 10.6, 10.7, 10.8
		P13 University of Luxembourg	Luxembourg	2	N/A	N/A	N/A	2	**Task Owner:** - N/A **Task Contributor:** - 10.1, 10.2, 10.3, 10.4, 10.5, 10.6, 10.7, 10.8
		P14 Airholding - Embraer Research and Technology Europe	Portugal	2	N/A	N/A	N/A	2	**Task Owner:** - N/A **Task Contributor:** - 10.1, 10.2, 10.3, 10.4, 10.5, 10.6, 10.7, 10.8
		P15 BERD	Portugal	2	N/A	N/A	N/A	2	**Task Owner:** - N/A **Task Contributor:** - 10.1, 10.2, 10.3, 10.4, 10.5, 10.6, 10.7, 10.8
		P16 Exceuticals	Portugal	2	N/A	N/A	N/A	2	**Task Owner:** - N/A **Task Contributor:** - 10.1, 10.2, 10.3, 10.4, 10.5, 10.6, 10.7, 10.8
		P17 Ausys Automation Systems	Slovakia	2	N/A	N/A	N/A	2	**Task Owner:** - N/A **Task Contributor:** - 10.1, 10.2, 10.3, 10.4, 10.5, 10.6, 10.7, 10.8
		P18 Sabanci University	Turkey	2	N/A	N/A	N/A	2	**Task Owner:** - N/A **Task Contributor:** - 10.1, 10.2, 10.3, 10.4, 10.5, 10.6, 10.7, 10.8
		P19 Edelweiss Connect GmbH	Switzerland	2	N/A	N/A	N/A	2	**Task Owner:** - N/A **Task Contributor:** - 10.1, 10.2, 10.3, 10.4, 10.5, 10.6, 10.7, 10.8
		P20 University of Bremen	Germany	2	N/A	N/A	N/A	2	**Task Owner:** - N/A **Task Contributor:** - 10.1, 10.2, 10.3, 10.4, 10.5, 10.6, 10.7, 10.8

Nº of Work Package	Lead partner	Partners involved	Country	Number of staff days					Role and tasks in the Work Package
				Category 1	Category 2	Category 3	Category 4	Total	
		P21 Impetus Solutions	India	1	N/A	N/A	N/A	1	**Task Owner:** - N/A **Task Contributor:** - 10.1, 10.2, 10.3, 10.4, 10.5, 10.6, 10.7, 10.8
		P22 Kaunas University of Technology	Lithuania	2	N/A	N/A	N/A	2	**Task Owner:** - N/A **Task Contributor:** - 10.1, 10.2, 10.3, 10.4, 10.5, 10.6, 10.7, 10.8
		P23 Vilnius University	Lithuania	2	N/A	N/A	N/A	2	**Task Owner:** - N/A **Task Contributor:** - 10.1, 10.2, 10.3, 10.4, 10.5, 10.6, 10.7, 10.8
		P24 Rolls-Royce Deutschland Ltd & Co KG	Germany	2	N/A	N/A	N/A	2	**Task Owner:** - N/A **Task Contributor:** - 10.1, 10.2, 10.3, 10.4, 10.5, 10.6, 10.7, 10.8
		P25 Entovation International Ltd.	USA	2	N/A	N/A	N/A	2	**Task Owner:** - N/A **Task Contributor:** - 10.1, 10.2, 10.3, 10.4, 10.5, 10.6, 10.7, 10.8
		P26 Volvo Lastvagnar AB	Sweden	2	N/A	N/A	N/A	2	**Task Owner:** - N/A **Task Contributor:** - 10.1, 10.2, 10.3, 10.4, 10.5, 10.6, 10.7, 10.8
		P27 Ariston Cavi	Italy	2	N/A	N/A	N/A	2	**Task Owner:** - N/A **Task Contributor:** - 10.1, 10.2, 10.3, 10.4, 10.5, 10.6, 10.7, 10.8
		P28 Baladi Ltd	Israel	2	N/A	N/A	N/A	2	**Task Owner:** - N/A **Task Contributor:** - 10.1, 10.2, 10.3, 10.4, 10.5, 10.6, 10.7, 10.8
	Subtotal			**186**	**0**	**0**	**0**	**186**	

Nº of Work Package	Lead partner	Partners involved	Country	Number of staff days					Role and tasks in the Work Package
				Category 1	Category 2	Category 3	Category 4	Total	
11		P1 Eurofocus International Consultants Ltd.	Germany	20	N/A	N/A	N/A	20	**Task Owner:** - N/A **Task Contributor:** - 11.1, 11.2, 11.3, 11.4, 11.5, 11.6, 11.7, 11.8, 11.9, 11.10
		P2 Tuke University	Slovakia	20	N/A	N/A	N/A	20	**Task Owner:** - N/A **Task Contributor:** - 11.1, 11.2, 11.3, 11.4, 11.5, 11.6, 11.7, 11.8, 11.9, 11.10
		P3 Riga Technical University	Latvia	2	N/A	N/A	N/A	2	**Task Owner:** - N/A **Task Contributor:** - 11.1, 11.2, 11.3, 11.4, 11.5, 11.6, 11.7, 11.8, 11.9, 11.10
		P4 University of Lisbon	Portugal	122	N/A	N/A	N/A	122	**Task Owner:** - 11.3 **Task Contributor:** - 11.1, 11.2, 11.4, 11.5, 11.6, 11.7, 11.8, 11.9, 11.10
		P5 ed-Media	Germany	2	N/A	N/A	N/A	2	**Task Owner:** - N/A **Task Contributor:** - 11.1, 11.2, 11.3, 11.4, 11.5, 11.6, 11.7, 11.8, 11.9, 11.10
		P6 Pasher & Associates	Israel	2	N/A	N/A	N/A	2	**Task Owner:** - N/A **Task Contributor:** - 11.1, 11.2, 11.3, 11.4, 11.5, 11.6, 11.7, 11.8, 11.9, 11.10
		P7 Eurecons Förderagentur GmbH	Germany	2	N/A	N/A	N/A	2	**Task Owner:** - N/A **Task Contributor:** - 11.1, 11.2, 11.3, 11.4, 11.5, 11.6, 11.7, 11.8, 11.9, 11.10
	Lead partner	P8 National University of Ireland Maynooth	Ireland	62	N/A	N/A	N/A	62	**Task Owner:** - Overall Workpackage **Task Contributor:** - N/A

Nº of Work Package	Lead partner	Partners involved	Country	Number of staff days					Role and tasks in the Work Package
				Category 1	Category 2	Category 3	Category 4	Total	
		P9 Technische Universität Berlin	Germany	20	N/A	N/A	N/A	20	**Task Owner:** - N/A **Task Contributor:** - 11.1, 11.2, 11.3, 11.4, 11.5, 11.6, 11.7, 11.8, 11.9, 11.10
		P10 University of Padova	Italy	2	N/A	N/A	N/A	2	**Task Owner:** - N/A **Task Contributor:** - 11.1, 11.2, 11.3, 11.4, 11.5, 11.6, 11.7, 11.8, 11.9, 11.10
		P11 Hochschule Kaiserslautern	Germany	2	N/A	N/A	N/A	2	**Task Owner:** - N/A **Task Contributor:** - 11.1, 11.2, 11.3, 11.4, 11.5, 11.6, 11.7, 11.8, 11.9, 11.10
		P12 GB Innovation Ltd.	Ireland	2	N/A	N/A	N/A	2	**Task Owner:** - N/A **Task Contributor:** - 11.1, 11.2, 11.3, 11.4, 11.5, 11.6, 11.7, 11.8, 11.9, 11.10
		P13 University of Luxembourg	Luxembourg	2	N/A	N/A	N/A	2	**Task Owner:** - N/A **Task Contributor:** - 11.1, 11.2, 11.3, 11.4, 11.5, 11.6, 11.7, 11.8, 11.9, 11.10
		P14 Airholding - Embraer Research and Technology Europe	Portugal	2	N/A	N/A	N/A	2	**Task Owner:** - N/A **Task Contributor:** - 11.1, 11.2, 11.3, 11.4, 11.5, 11.6, 11.7, 11.8, 11.9, 11.10
		P15 BERD	Portugal	2	N/A	N/A	N/A	2	**Task Owner:** - N/A **Task Contributor:** - 11.1, 11.2, 11.3, 11.4, 11.5, 11.6, 11.7, 11.8, 11.9, 11.10
		P16 Exceuticals	Portugal	2	N/A	N/A	N/A	2	**Task Owner:** - N/A **Task Contributor:** - 11.1, 11.2, 11.3, 11.4, 11.5, 11.6, 11.7, 11.8, 11.9, 11.10

Nº of Work Package	Lead partner	Partners involved	Country	Number of staff days					Role and tasks in the Work Package
				Category 1	Category 2	Category 3	Category 4	Total	
		P17 Ausys Automation Systems	Slovakia	2	N/A	N/A	N/A	2	**Task Owner:** - N/A **Task Contributor:** - 11.1, 11.2, 11.3, 11.4, 11.5, 11.6, 11.7, 11.8, 11.9, 11.10
		P18 Sabanci University	Turkey	2	N/A	N/A	N/A	2	**Task Owner:** - N/A **Task Contributor:** - 11.1, 11.2, 11.3, 11.4, 11.5, 11.6, 11.7, 11.8, 11.9, 11.10
		P19 Edelweiss Connect GmbH	Switzerland	2	N/A	N/A	N/A	2	**Task Owner:** - N/A **Task Contributor:** - 11.1, 11.2, 11.3, 11.4, 11.5, 11.6, 11.7, 11.8, 11.9, 11.10
		P20 University of Bremen	Germany	2	N/A	N/A	N/A	2	**Task Owner:** - N/A **Task Contributor:** - 11.1, 11.2, 11.3, 11.4, 11.5, 11.6, 11.7, 11.8, 11.9, 11.10
		P21 Impetus Solutions	India	60	N/A	N/A	N/A	60	**Task Owner:** - (Technical Integration and Support) **Task Contributor:** - 11.1, 11.2, 11.3, 11.4, 11.5, 11.6, 11.7, 11.8, 11.9, 11.10
		P22 Kaunas University of Technology	Lithuania	2	N/A	N/A	N/A	2	**Task Owner:** - N/A **Task Contributor:** - 11.1, 11.2, 11.3, 11.4, 11.5, 11.6, 11.7, 11.8, 11.9, 11.10
		P23 Vilnius University	Lithuania	2	N/A	N/A	N/A	2	**Task Owner:** - N/A **Task Contributor:** - 11.1, 11.2, 11.3, 11.4, 11.5, 11.6, 11.7, 11.8, 11.9, 11.10
		P24 Rolls-Royce Deutschland Ltd & Co KG	Germany	2	N/A	N/A	N/A	2	**Task Owner:** - N/A **Task Contributor:** - 11.1, 11.2, 11.3, 11.4, 11.5, 11.6, 11.7, 11.8, 11.9, 11.10

Nº of Work Package	Lead partner	Partners involved	Country	Number of staff days					Role and tasks in the Work Package
				Category 1	Category 2	Category 3	Category 4	Total	
		P25 Entovation International Ltd.	USA	2	N/A	N/A	N/A	2	**Task Owner:** - N/A **Task Contributor:** - 11.1, 11.2, 11.3, 11.4, 11.5, 11.6, 11.7, 11.8, 11.9, 11.10
		P26 Volvo Lastvagnar AB	Sweden	2	N/A	N/A	N/A	2	**Task Owner:** - N/A **Task Contributor:** - 11.1, 11.2, 11.3, 11.4, 11.5, 11.6, 11.7, 11.8, 11.9, 11.10
		P27 Ariston Cavi	Italy	2	N/A	N/A	N/A	2	**Task Owner:** - N/A **Task Contributor:** - 11.1, 11.2, 11.3, 11.4, 11.5, 11.6, 11.7, 11.8, 11.9, 11.10
		P28 Baladi Ltd	Israel	2	N/A	N/A	N/A	2	**Task Owner:** - N/A **Task Contributor:** - 11.1, 11.2, 11.3, 11.4, 11.5, 11.6, 11.7, 11.8, 11.9, 11.10
	Subtotal			**348**	**0**	**0**	**0**	**348**	

Nº of Work Package	Lead partner	Partners involved	Country	Number of staff days					Role and tasks in the Work Package
				Category 1	Category 2	Category 3	Category 4	Total	
12		P1 Eurofocus International Consultants Ltd.	Germany	20	N/A	N/A	N/A	20	**Task Owner:** - N/A **Task Contributor:** - 12.1, 12.2, 12.3, 12.4, 12.5, 12.6, 12.7, 12.8, 12.9, 12.10, 12.11, 12.12, 12.13
	Lead partner	P2 Tuke University	Slovakia	120	N/A	N/A	N/A	120	**Task Owner:** - Overall Workpackage **Task Contributor:** - N/A
		P3 Riga Technical University	Latvia	2	N/A	N/A	N/A	2	**Task Owner:** - N/A **Task Contributor:** - 12.1, 12.2, 12.3, 12.4, 12.5, 12.6, 12.7, 12.8, 12.9, 12.10, 12.11, 12.12, 12.13
		P4 University of Lisbon	Portugal	2	N/A	N/A	N/A	2	**Task Owner:** - N/A **Task Contributor:** - 12.1, 12.2, 12.3, 12.4, 12.5, 12.6, 12.7, 12.8, 12.9, 12.10, 12.11, 12.12, 12.13
		P5 ed-Media	Germany	2	N/A	N/A	N/A	2	**Task Owner:** - N/A **Task Contributor:** - 12.1, 12.2, 12.3, 12.4, 12.5, 12.6, 12.7, 12.8, 12.9, 12.10, 12.11, 12.12, 12.13
		P6 Pasher & Associates	Israel	2	N/A	N/A	N/A	2	**Task Owner:** - N/A **Task Contributor:** - 12.1, 12.2, 12.3, 12.4, 12.5, 12.6, 12.7, 12.8, 12.9, 12.10, 12.11, 12.12, 12.13
		P7 Eurecons Förderagentur GmbH	Germany	2	N/A	N/A	N/A	2	**Task Owner:** - N/A **Task Contributor:** - 12.1, 12.2, 12.3, 12.4, 12.5, 12.6, 12.7, 12.8, 12.9, 12.10, 12.11, 12.12, 12.13
		P8 National University of Ireland Maynooth	Ireland	10	N/A	N/A	N/A	10	**Task Owner:** - N/A **Task Contributor:** - 12.1, 12.2, 12.3, 12.4, 12.5, 12.6, 12.7, 12.8, 12.9, 12.10, 12.11, 12.12, 12.13

Nº of Work Package	Lead partner	Partners involved	Country	Number of staff days					Role and tasks in the Work Package
				Category 1	Category 2	Category 3	Category 4	Total	
		P9 Technische Universität Berlin	Germany	10	N/A	N/A	N/A	10	**Task Owner:** - N/A **Task Contributor:** - 12.1, 12.2, 12.3, 12.4, 12.5, 12.6, 12.7, 12.8, 12.9, 12.10, 12.11, 12.12, 12.13
		P10 University of Padova	Italy	2	N/A	N/A	N/A	2	**Task Owner:** - N/A **Task Contributor:** - 12.1, 12.2, 12.3, 12.4, 12.5, 12.6, 12.7, 12.8, 12.9, 12.10, 12.11, 12.12, 12.13
		P11 Hochschule Kaiserslautern	Germany	2	N/A	N/A	N/A	2	**Task Owner:** - N/A **Task Contributor:** - 12.1, 12.2, 12.3, 12.4, 12.5, 12.6, 12.7, 12.8, 12.9, 12.10, 12.11, 12.12, 12.13
		P12 GB Innovation Ltd.	Ireland	2	N/A	N/A	N/A	2	**Task Owner:** - N/A **Task Contributor:** - 12.1, 12.2, 12.3, 12.4, 12.5, 12.6, 12.7, 12.8, 12.9, 12.10, 12.11, 12.12, 12.13
		P13 University of Luxembourg	Luxembourg	2	N/A	N/A	N/A	2	**Task Owner:** - N/A **Task Contributor:** - 12.1, 12.2, 12.3, 12.4, 12.5, 12.6, 12.7, 12.8, 12.9, 12.10, 12.11, 12.12, 12.13
		P14 Airholding - Embraer Research and Technology Europe	Portugal	2	N/A	N/A	N/A	2	**Task Owner:** - N/A **Task Contributor:** - 12.1, 12.2, 12.3, 12.4, 12.5, 12.6, 12.7, 12.8, 12.9, 12.10, 12.11, 12.12, 12.13
		P15 BERD	Portugal	2	N/A	N/A	N/A	2	**Task Owner:** - N/A **Task Contributor:** - 12.1, 12.2, 12.3, 12.4, 12.5, 12.6, 12.7, 12.8, 12.9, 12.10, 12.11, 12.12, 12.13
		P16 Exceuticals	Portugal	2	N/A	N/A	N/A	2	**Task Owner:** - N/A **Task Contributor:** - 12.1, 12.2, 12.3, 12.4, 12.5, 12.6, 12.7, 12.8, 12.9, 12.10, 12.11, 12.12, 12.13

Nº of Work Package	Lead partner	Partners involved	Country	Number of staff days					Role and tasks in the Work Package
				Category 1	Category 2	Category 3	Category 4	Total	
		P17 Ausys Automation Systems	Slovakia	2	N/A	N/A	N/A	2	**Task Owner:** - N/A **Task Contributor:** - 12.1, 12.2, 12.3, 12.4, 12.5, 12.6, 12.7, 12.8, 12.9, 12.10, 12.11, 12.12, 12.13
		P18 Sabanci University	Turkey	2	N/A	N/A	N/A	2	**Task Owner:** - N/A **Task Contributor:** - 12.1, 12.2, 12.3, 12.4, 12.5, 12.6, 12.7, 12.8, 12.9, 12.10, 12.11, 12.12, 12.13
		P19 Edelweiss Connect GmbH	Switzerland	2	N/A	N/A	N/A	2	**Task Owner:** - N/A **Task Contributor:** - 12.1, 12.2, 12.3, 12.4, 12.5, 12.6, 12.7, 12.8, 12.9, 12.10, 12.11, 12.12, 12.13
		P20 University of Bremen	Germany	2	N/A	N/A	N/A	2	**Task Owner:** - N/A **Task Contributor:** - 12.1, 12.2, 12.3, 12.4, 12.5, 12.6, 12.7, 12.8, 12.9, 12.10, 12.11, 12.12, 12.13
		P21 Impetus Solutions	India	1	N/A	N/A	N/A	1	**Task Owner:** - N/A **Task Contributor:** - 12.1, 12.2, 12.3, 12.4, 12.5, 12.6, 12.7, 12.8, 12.9, 12.10, 12.11, 12.12, 12.13
		P22 Kaunas University of Technology	Lithuania	2	N/A	N/A	N/A	2	**Task Owner:** - N/A **Task Contributor:** - 12.1, 12.2, 12.3, 12.4, 12.5, 12.6, 12.7, 12.8, 12.9, 12.10, 12.11, 12.12, 12.13
		P23 Vilnius University	Lithuania	2	N/A	N/A	N/A	2	**Task Owner:** - N/A **Task Contributor:** - 12.1, 12.2, 12.3, 12.4, 12.5, 12.6, 12.7, 12.8, 12.9, 12.10, 12.11, 12.12, 12.13
		P24 Rolls-Royce Deutschland Ltd & Co KG	Germany	2	N/A	N/A	N/A	2	**Task Owner:** - N/A **Task Contributor:** - 12.1, 12.2, 12.3, 12.4, 12.5, 12.6, 12.7, 12.8, 12.9, 12.10, 12.11, 12.12, 12.13

Nº of Work Package	Lead partner	Partners involved	Country	Number of staff days					Role and tasks in the Work Package
				Category 1	Category 2	Category 3	Category 4	Total	
		P25 Entovation International Ltd.	USA	2	N/A	N/A	N/A	2	**Task Owner:** - N/A **Task Contributor:** - 12.1, 12.2, 12.3, 12.4, 12.5, 12.6, 12.7, 12.8, 12.9, 12.10, 12.11, 12.12, 12.13
		P26 Volvo Lastvagnar AB	Sweden	2	N/A	N/A	N/A	2	**Task Owner:** - N/A **Task Contributor:** - 12.1, 12.2, 12.3, 12.4, 12.5, 12.6, 12.7, 12.8, 12.9, 12.10, 12.11, 12.12, 12.13
		P27 Ariston Cavi	Italy	2	N/A	N/A	N/A	2	**Task Owner:** - N/A **Task Contributor:** - 12.1, 12.2, 12.3, 12.4, 12.5, 12.6, 12.7, 12.8, 12.9, 12.10, 12.11, 12.12, 12.13
		P28 Baladi Ltd	Israel	2	N/A	N/A	N/A	2	**Task Owner:** - N/A **Task Contributor:** - 12.1, 12.2, 12.3, 12.4, 12.5, 12.6, 12.7, 12.8, 12.9, 12.10, 12.11, 12.12, 12.13
	Subtotal			**207**	**0**	**0**	**0**	**207**	

Nº of Work Package	Lead partner	Partners involved	Country	Number of staff days					Role and tasks in the Work Package
				Category 1	Category 2	Category 3	Category 4	Total	
13		P1 Eurofocus International Consultants Ltd.	Germany	20	N/A	N/A	N/A	20	**Task Owner:** - N/A **Task Contributor:** - 13.1, 13.2, 13.3, 13.4, 13.5, 13.6, 13.7
		P2 Tuke University	Slovakia	2	N/A	N/A	N/A	2	**Task Owner:** - N/A **Task Contributor:** - 13.1, 13.2, 13.3, 13.4, 13.5, 13.6, 13.7
		P3 Riga Technical University	Latvia	2	N/A	N/A	N/A	2	**Task Owner:** - N/A **Task Contributor:** - 13.1, 13.2, 13.3, 13.4, 13.5, 13.6, 13.7
		P4 University of Lisbon	Portugal	2	N/A	N/A	N/A	2	**Task Owner:** - N/A **Task Contributor:** - 13.1, 13.2, 13.3, 13.4, 13.5, 13.6, 13.7
		P5 ed-Media	Germany	2	N/A	N/A	N/A	2	**Task Owner:** - N/A **Task Contributor:** - 13.1, 13.2, 13.3, 13.4, 13.5, 13.6, 13.7
		P6 Pasher & Associates	Israel	2	N/A	N/A	N/A	2	**Task Owner:** - N/A **Task Contributor:** - 13.1, 13.2, 13.3, 13.4, 13.5, 13.6, 13.7
		P7 Eurecons Förderagentur GmbH	Germany	2	N/A	N/A	N/A	2	**Task Owner:** - N/A **Task Contributor:** - 13.1, 13.2, 13.3, 13.4, 13.5, 13.6, 13.7
		P8 National University of Ireland Maynooth	Ireland	20	N/A	N/A	N/A	20	**Task Owner:** - N/A **Task Contributor:** - 13.1, 13.2, 13.3, 13.4, 13.5, 13.6, 13.7
	Lead partner	P9 Technische Universität Berlin	Germany	62	N/A	N/A	N/A	62	**Task Owner:** - Overall Workpackage **Task Contributor:** - N/A
		P10 University of Padova	Italy	2	N/A	N/A	N/A	2	**Task Owner:** - N/A **Task Contributor:** - 13.1, 13.2, 13.3, 13.4, 13.5, 13.6, 13.7

Nº of Work Package	Lead partner	Partners involved	Country	Number of staff days					Role and tasks in the Work Package
				Category 1	Category 2	Category 3	Category 4	Total	
		P11 Hochschule Kaiserslautern	Germany	2	N/A	N/A	N/A	2	**Task Owner:** - N/A **Task Contributor:** - 13.1, 13.2, 13.3, 13.4, 13.5, 13.6, 13.7
		P12 GB Innovation Ltd.	Ireland	2	N/A	N/A	N/A	2	**Task Owner:** - N/A **Task Contributor:** - 13.1, 13.2, 13.3, 13.4, 13.5, 13.6, 13.7
		P13 University of Luxembourg	Luxembourg	2	N/A	N/A	N/A	2	**Task Owner:** - N/A **Task Contributor:** - 13.1, 13.2, 13.3, 13.4, 13.5, 13.6, 13.7
		P14 Airholding - Embraer Research and Technology Europe	Portugal	2	N/A	N/A	N/A	2	**Task Owner:** - N/A **Task Contributor:** - 13.1, 13.2, 13.3, 13.4, 13.5, 13.6, 13.7
		P15 BERD	Portugal	2	N/A	N/A	N/A	2	**Task Owner:** - N/A **Task Contributor:** - 13.1, 13.2, 13.3, 13.4, 13.5, 13.6, 13.7
		P16 Exceuticals	Portugal	2	N/A	N/A	N/A	2	**Task Owner:** - N/A **Task Contributor:** - 13.1, 13.2, 13.3, 13.4, 13.5, 13.6, 13.7
		P17 Ausys Automation Systems	Slovakia	2	N/A	N/A	N/A	2	**Task Owner:** - N/A **Task Contributor:** - 13.1, 13.2, 13.3, 13.4, 13.5, 13.6, 13.7
		P18 Sabanci University	Turkey	2	N/A	N/A	N/A	2	**Task Owner:** - N/A **Task Contributor:** - 13.1, 13.2, 13.3, 13.4, 13.5, 13.6, 13.7
		P19 Edelweiss Connect GmbH	Switzerland	2	N/A	N/A	N/A	2	**Task Owner:** - N/A **Task Contributor:** - 13.1, 13.2, 13.3, 13.4, 13.5, 13.6, 13.7
		P20 University of Bremen	Germany	2	N/A	N/A	N/A	2	**Task Owner:** - N/A **Task Contributor:** - 13.1, 13.2, 13.3, 13.4, 13.5, 13.6, 13.7

Nº of Work Package	Lead partner	Partners involved	Country	Number of staff days					Role and tasks in the Work Package
				Category 1	Category 2	Category 3	Category 4	Total	
		P21 Impetus Solutions	India	30	N/A	N/A	N/A	30	**Task Owner:** - (Technical Integration and Support) **Task Contributor:** - 13.1, 13.2, 13.3, 13.4, 13.5, 13.6, 13.7
		P22 Kaunas University of Technology	Lithuania	2	N/A	N/A	N/A	2	**Task Owner:** - N/A **Task Contributor:** - 13.1, 13.2, 13.3, 13.4, 13.5, 13.6, 13.7
		P23 Vilnius University	Lithuania	2	N/A	N/A	N/A	2	**Task Owner:** - N/A **Task Contributor:** - 13.1, 13.2, 13.3, 13.4, 13.5, 13.6, 13.7
		P24 Rolls-Royce Deutschland Ltd & Co KG	Germany	2	N/A	N/A	N/A	2	**Task Owner:** - N/A **Task Contributor:** - 13.1, 13.2, 13.3, 13.4, 13.5, 13.6, 13.7
		P25 Entovation International Ltd.	USA	2	N/A	N/A	N/A	2	**Task Owner:** - N/A **Task Contributor:** - 13.1, 13.2, 13.3, 13.4, 13.5, 13.6, 13.7
		P26 Volvo Lastvagnar AB	Sweden	2	N/A	N/A	N/A	2	**Task Owner:** - N/A **Task Contributor:** - 13.1, 13.2, 13.3, 13.4, 13.5, 13.6, 13.7
		P27 Ariston Cavi	Italy	2	N/A	N/A	N/A	2	**Task Owner:** - N/A **Task Contributor:** - 13.1, 13.2, 13.3, 13.4, 13.5, 13.6, 13.7
		P28 Baladi Ltd	Israel	2	N/A	N/A	N/A	2	**Task Owner:** - N/A **Task Contributor:** - 13.1, 13.2, 13.3, 13.4, 13.5, 13.6, 13.7
	Subtotal			**180**	**0**	**0**	**0**	**180**	

Nº of Work Package	Lead partner	Partners involved	Country	Number of staff days					Role and tasks in the Work Package
				Category 1	Category 2	Category 3	Category 4	Total	
14		P1 Eurofocus International Consultants Ltd.	Germany	15	N/A	N/A	N/A	15	**Task Owner:** - N/A **Task Contributor:** - 14.1, 14.2, 14.3, 14.4, 14.5
		P2 Tuke University	Slovakia	2	N/A	N/A	N/A	2	**Task Owner:** - N/A **Task Contributor:** - 14.1, 14.2, 14.3, 14.4, 14.5
		P3 Riga Technical University	Latvia	2	N/A	N/A	N/A	2	**Task Owner:** - N/A **Task Contributor:** - 14.1, 14.2, 14.3, 14.4, 14.5
		P4 University of Lisbon	Portugal	2	N/A	N/A	N/A	2	**Task Owner:** - N/A **Task Contributor:** - 14.1, 14.2, 14.3, 14.4, 14.5
		P5 ed-Media	Germany	2	N/A	N/A	N/A	2	**Task Owner:** - N/A **Task Contributor:** - 14.1, 14.2, 14.3, 14.4, 14.5
		P6 Pasher & Associates	Israel	2	N/A	N/A	N/A	2	**Task Owner:** - N/A **Task Contributor:** - 14.1, 14.2, 14.3, 14.4, 14.5
		P7 Eurecons Förderagentur GmbH	Germany	2	N/A	N/A	N/A	2	**Task Owner:** - N/A **Task Contributor:** - 14.1, 14.2, 14.3, 14.4, 14.5
		P8 National University of Ireland Maynooth	Ireland	2	N/A	N/A	N/A	2	**Task Owner:** - N/A **Task Contributor:** - 14.1, 14.2, 14.3, 14.4, 14.5
		P9 Technische Universität Berlin	Germany	2	N/A	N/A	N/A	2	**Task Owner:** - N/A **Task Contributor:** - 14.1, 14.2, 14.3, 14.4, 14.5
	Lead partner	P10 University of Padova	Italy	62	N/A	N/A	N/A	62	**Task Owner:** - Overall Workpackage **Task Contributor:** - N/A

Nº of Work Package	Lead partner	Partners involved	Country	Number of staff days					Role and tasks in the Work Package
				Category 1	Category 2	Category 3	Category 4	Total	
		P11 Hochschule Kaiserslautern	Germany	2	N/A	N/A	N/A	2	**Task Owner:** - N/A **Task Contributor:** - 14.1, 14.2, 14.3, 14.4, 14.5
		P12 GB Innovation Ltd.	Ireland	2	N/A	N/A	N/A	2	**Task Owner:** - N/A **Task Contributor:** - 14.1, 14.2, 14.3, 14.4, 14.5
		P13 University of Luxembourg	Luxembourg	2	N/A	N/A	N/A	2	**Task Owner:** - N/A **Task Contributor:** - 14.1, 14.2, 14.3, 14.4, 14.5
		P14 Airholding - Embraer Research and Technology Europe	Portugal	2	N/A	N/A	N/A	2	**Task Owner:** - N/A **Task Contributor:** - 14.1, 14.2, 14.3, 14.4, 14.5
		P15 BERD	Portugal	2	N/A	N/A	N/A	2	**Task Owner:** - N/A **Task Contributor:** - 14.1, 14.2, 14.3, 14.4, 14.5
		P16 Exceuticals	Portugal	2	N/A	N/A	N/A	2	**Task Owner:** - N/A **Task Contributor:** - 14.1, 14.2, 14.3, 14.4, 14.5
		P17 Ausys Automation Systems	Slovakia	2	N/A	N/A	N/A	2	**Task Owner:** - N/A **Task Contributor:** - 14.1, 14.2, 14.3, 14.4, 14.5
		P18 Sabanci University	Turkey	2	N/A	N/A	N/A	2	**Task Owner:** - N/A **Task Contributor:** - 14.1, 14.2, 14.3, 14.4, 14.5
		P19 Edelweiss Connect GmbH	Switzerland	2	N/A	N/A	N/A	2	**Task Owner:** - N/A **Task Contributor:** - 14.1, 14.2, 14.3, 14.4, 14.5
		P20 University of Bremen	Germany	2	N/A	N/A	N/A	2	**Task Owner:** - N/A **Task Contributor:** - 14.1, 14.2, 14.3, 14.4, 14.5

Nº of Work Package	Lead partner	Partners involved	Country	Number of staff days					Role and tasks in the Work Package
				Category 1	Category 2	Category 3	Category 4	Total	
		P21 Impetus Solutions	India	1	N/A	N/A	N/A	1	**Task Owner:** - N/A **Task Contributor:** - 14.1, 14.2, 14.3, 14.4, 14.5
		P22 Kaunas University of Technology	Lithuania	2	N/A	N/A	N/A	2	**Task Owner:** - N/A **Task Contributor:** - 14.1, 14.2, 14.3, 14.4, 14.5
		P23 Vilnius University	Lithuania	2	N/A	N/A	N/A	2	**Task Owner:** - N/A **Task Contributor:** - 14.1, 14.2, 14.3, 14.4, 14.5
		P24 Rolls-Royce Deutschland Ltd & Co KG	Germany	2	N/A	N/A	N/A	2	**Task Owner:** - N/A **Task Contributor:** - 14.1, 14.2, 14.3, 14.4, 14.5
		P25 Entovation International Ltd.	USA	2	N/A	N/A	N/A	2	**Task Owner:** - N/A **Task Contributor:** - 14.1, 14.2, 14.3, 14.4, 14.5
		P26 Volvo Lastvagnar AB	Sweden	2	N/A	N/A	N/A	2	**Task Owner:** - N/A **Task Contributor:** - 14.1, 14.2, 14.3, 14.4, 14.5
		P27 Ariston Cavi	Italy	2	N/A	N/A	N/A	2	**Task Owner:** - N/A **Task Contributor:** - 14.1, 14.2, 14.3, 14.4, 14.5
		P28 Baladi Ltd	Israel	2	N/A	N/A	N/A	2	**Task Owner:** - N/A **Task Contributor:** - 14.1, 14.2, 14.3, 14.4, 14.5
	Subtotal			**128**	**0**	**0**	**0**	**128**	

VII.3. Overview of expected results (outputs and outcomes)

Nº of WP	Lead organisation (Pn)	Deliverable Number	Start date	End date	Title of the deliverable	Medium that will be used (publication, electronic, online, other (specify))	Languages	Dissemination level (Public, Restricted, Confidential)	Target groups/potential beneficiaries
1	**P1**	**1**	**M1**	**M3**	**Preparation**				
1	P1	1.1	M1	M1	OUTPUT: Finalized Grant and Consortium Agreement	Paper publication	English	Confidential	Consortium
1	P1	1.2	M1	M1	OUTPUT: Participant Readiness Confirmed	Paper publication	English	Confidential	Consortium
1	P1	1.3	M1	M1	OUTPUT: Project Description Refreshed and Baselined	Electronic version published in media	English	Confidential	Consortium
1	P1	1.4	M1	M1	OUTPUT: Open Source Software for Simulation, Collaboration and Learning	Electronic version published in media	English	Confidential	Consortium
1	P1	1.5	M2	M2	OUTCOME: Project Server Configured and Launched	Electronic version published online	English	Confidential	Consortium
1	P1	1.6	M2	M2	OUTCOME: Project Participants Enabled to Participate	Electronic version published in media	English	Confidential	Consortium
1	P1	1.7	M1	M1	OUTPUT: Project Risk Register	Electronic version published in media	English	Confidential	Consortium
1	P1	1.8	M1	M2	OUTPUT: Project Communications Plan	Electronic version published in media	English	Confidential	Consortium
1	P1	1.9	M1	M1	OUTCOME: Project Governance Established and Launched	Electronic version published in media	English	Confidential	Consortium
1	P1	1.10	M3	M3	OUTCOME: Face-to-Face Project Launch Event Conducted	Other:	English	Confidential	Consortium
1	P1	1.11	M1	M1	OUTPUT: Agreed WP1 and WP 3 Workshop Schedules	Electronic version published in media	English	Confidential	Consortium
1	P1	1.12	M1	M1	OUTPUT: Project Image (incl. Communication and Deliverable Templates)	Electronic version published in media	English	Confidential	Consortium
1	P1	1.13	M1	M1	OUTPUT: IP Register	Electronic version published in media	English	Confidential	Consortium
1	P1	1.14	M1	M1	OUTPUT: Mobile App	Electronic version published online	English	Confidential	Consortium
1	P1	1.15	M1	M1	OUTPUT: Effectiveness Evaluation Scorecard	Electronic version published in media	English	Confidential	Consortium

Nº of WP	Lead organisation (Pn)	Deliverable Number	Start date	End date	Title of the deliverable	Medium that will be used (publication, electronic, online, other (specify))	Languages	Dissemination level (Public, Restricted, Confidential)	Target groups/potential beneficiaries
2	**P1**	**2**	**M1**	**M36**	**Management**				
2	P1	2.1	M1	M36	OUTCOME: Effective Day-to-Day Project Management	Electronic version published online	English	Confidential	Consortium
2	P1	2.2	M1	M36	OUTCOME: Coordinated Project Meetings and Events	Electronic version published online	English	Confidential	Consortium
2	P1	2.3	M1	M36	OUTPUT: Formal Reporting	Electronic version published in media	English	Confidential	Consortium
2	P1	2.4	M1	M36	OUTCOME: Work Package Progress and Results Monitored	Electronic version published in media	English	Confidential	Consortium
2	P1	2.5	M1	M36	OUTCOME: IP Register Maintained	Electronic version published in media	English	Confidential	Consortium
2	P1	2.6	M26	M36	OUTPUT: Non-Profit Organization Application	Electronic version published in media	English	Confidential	Consortium
2	P1	2.7	M26	M36	OUTPUT: Curriculum Accreditation Request	Electronic version published in media	English	Confidential	Consortium
2	P1	2.8	M26	M36	OUTPUT: Curriculum License Model	Electronic version published in media	English	Confidential	Consortium
2	P1	2.9	M26	M36	OUTPUT: Software as a Service Licencing Model	Electronic version published in media	English	Confidential	Consortium
2	P1	2.10	M1	M36	OUTCOME: Project Communications Plan Implemented	Electronic version published in media	English	Confidential	Consortium
2	P1	2.11	M1	M36	OUTCOME: Project Risk Register monitored and updated monthly	Electronic version published in media	English	Confidential	Consortium
3	**P2**	**3**	**M1**	**M36**	**Quality Assurance**				
3	P2	3.1	M1	M1	OUTCOME: Quality Plan Implemented	Electronic version published in media	English	Confidential	Consortium
3	P2	3.2	M1	M36	OUTCOME: Content Quality of Results (incl. Peer Review and Remediation Monitoring)	Electronic version published in media	English	Confidential	Consortium
3	P2	3.3	M1	M36	OUTCOME: Formal Quality of Results (incl. Coordinate Lectoring)	Electronic version published in media	English	Confidential	Consortium
3	P2	3.4	M1	M36	OUTCOME: Timely Submission of Results	Electronic version published in media	English	Confidential	Consortium
3	P2	3.5	M1	M36	OUTCOME: Collaboration Quality	Electronic version published in media	English	Confidential	Consortium
4	**P3**	**4**	**M1**	**M36**	**Effectiveness Evaluation**				

Nº of WP	Lead organisation (Pn)	Deliverable Number	Start date	End date	Title of the deliverable	Medium that will be used (publication, electronic, online, other (specify))	Languages	Dissemination level (Public, Restricted, Confidential)	Target groups/potential beneficiaries
4	P3	4.1	M1	M3	OUTCOME: External Advisory Board Created	Electronic version published in media	English	Confidential	Consortium
4	P3	4.2	M1	M36	OUTCOME: WP Results Evaluated	Electronic version published in media	English	Confidential	Consortium
4	P3	4.3	M1	M36	OUTCOME: Career Framework Module Value Creation Monitored	Electronic version published in media	English	Confidential	Consortium
4	P3	4.4	M1	M36	OUTCOME: Improvement Suggestions Provided	Electronic version published in media	English	Confidential	Consortium
5	**P4**	**5**	**M1**	**M36**	**Dissemination and Exploitation**				
5	P4	5.1	M1	M3	OUTPUT: Performance Indicators	Electronic version published in media	English	Public	Consortium
5	P4	5.2	M3	M6	OUTCOME: Starting Conditions Assessed and Desired Final Conditions Agreed	Electronic version published in media	English	Public	Consortium
5	P4	5.3	M3	M6	OUTCOME: Improvement activities plan created and implemented	Electronic version published in media	English	Public	Consortium
5	P4	5.4	M1	M36	OUTCOME: Awareness Raised	Electronic version published in media	English	Public	Higher Education and Industry
5	P4	5.5	M1	M36	OUTCOME: Impact Extended	Electronic version published in media	English	Public	Higher Education and Industry
5	P4	5.6	M1	M36	OUTCOME: Target Groups Engaged	Electronic version published in media	English	Public	Higher Education and Industry
5	P4	5.7	M1	M36	OUTCOME: Solutions and Know How Shared	Electronic version published in media	English	Public	Higher Education and Industry
5	P4	5.8	M1	M36	OUTCOME: Policy and Practice Influenced	Electronic version published in media	English	Public	Higher Education and Industry
5	P4	5.9	M1	M36	OUTCOME: Partnerships Grown	Electronic version published in media	English	Public	Higher Education and Industry
5	P4	5.10	M34	M36	OUTPUT: Final State Assessment	Electronic version published in media	English	Public	Consortium
6	**P5**	**6**	**M1**	**M36**	**Create Career Framework**				
6	P5	6.1	M1	M3	OUTPUT: Curriculum Strategy (incl. Definition of Required Learning Content)	Electronic version published in media	English	Public	Higher Education and Industry
6	P5	6.2	M1	M3	OUTPUT: Collaboration and Ideation Framework	Electronic version published in media	English	Public	Higher Education and Industry
6	P5	6.3	M1	M30	OUTPUT: Learning Content	Electronic version published in media	English	Public	Higher Education and Industry

Nº of WP	Lead organisation (Pn)	Deliverable Number	Start date	End date	Title of the deliverable	Medium that will be used (publication, electronic, online, other (specify))	Languages	Dissemination level (Public, Restricted, Confidential)	Target groups/potential beneficiaries
6	P5	6.4	M3	M6	OUTCOME: Delivery Mechanisms Determined and Enabled	Electronic version published in media	English	Public	Higher Education and Industry
6	P5	6.5	M3	M6	OUTCOME: Learning Environments Defined and Created	Electronic version published in media	English	Public	Higher Education and Industry
6	P5	6.6	M3	M6	OUPUT: (Stakeholder Assessment)	Electronic version published in media	English	Public	Higher Education and Industry
6	P5	6.7	M6	M18	OUTPUT: Iterative (ECTS) Recognition Application	Electronic version published in media	English	Public	Higher Education and Industry
6	P5	6.8	M1	M36	OUTCOME: Participation Ensured	Electronic version published in media	English	Public	Higher Education and Industry
6	P5	6.9	M9	M36	OUTPUT: Learning Content Iteratively Piloted with Participating Businesses	Electronic version published in media	English	Public	Higher Education and Industry
6	P5	6.10	M6	M24	OUTCOME: Ideation Pilots Conducted	Electronic version published in media	English	Public	Higher Education and Industry
6	P5	6.11	M6	M36	OUTPUT: Ideation Pilot Idea Diffusion Tracked	Electronic version published in media	English	Public	Higher Education and Industry
6	P5	6.12	M30	M36	OUTPUT: Application for Erasmus Mundus Joint Masters Degree Program Approval	Electronic version published in media	English	Public	Higher Education and Industry
6	P5	6.13	M24	M36	OUTPUT: Policy Guidance	Electronic version published in media	English	Public	Higher Education and Industry
7	**P6**	**7**	**M1**	**M36**	**Create Digital Collaboration Community**				
7	P6	7.1	M1	M3	OUTPUT: Digital Collaboration Infrastructure	Other:	English	Public	Higher Education and Industry
7	P6	7.2	M2	M3	OUTPUT: Digital Collaboration Plan	Electronic version published in media	English	Public	Higher Education and Industry
7	P6	7.3	M1	M6	OUTCOME: Digital Collaboration Plan Implemented	Other:	English	Public	Higher Education and Industry
7	P6	7.4	M6	M36	OUTPUT: Solve Challenges	Electronic version published in media	English	Public	Higher Education and Industry
7	P6	7.5	M6	M36	OUTPUT: Monitor Collaboration	Electronic version published in media	English	Public	Higher Education and Industry
7	P6	7.6	M24	M36	OUTPUT: Automate Web Weaver Role	Other:	English	Public	Higher Education and Industry
8	**P1**	**8**	**M1**	**M7**	**Create Simulation**				

Nº of WP	Lead organisation (Pn)	Deliverable Number	Start date	End date	Title of the deliverable	Medium that will be used (publication, electronic, online, other (specify))	Languages	Dissemination level (Public, Restricted, Confidential)	Target groups/potential beneficiaries
8	P1	8.1	M1	M3	OUTPUT: Baseline Generic Simulation (Version 1.0)	Electronic version published in media	English	Public	Higher Education and Industry
8	P1	8.2	M3	M6	OUTPUT: Business Specific Simulations	Electronic version published in media	English	Public	Higher Education and Industry
8	P1	8.3	M6	M6	OUTPUT: Integrated Simulation (Version 2.0)	Electronic version published in media	English	Public	Higher Education and Industry
8	P1	8.4	M6	M6	OUTCOME: WP9 Enabled	Other:	English	Confidential	Consortium
8	P1	8.5	M6	M6	OUTCOME: WP10 Enabled	Other:	English	Confidential	Consortium
8	P1	8.6	M9	M9	OUTPUT: Integrated Simulation (Version 3.0)	Electronic version published in media	English	Public	Higher Education and Industry
8	P1	8.7	M6	M6	OUTCOME: WP6 Enabled	Other:	English	Confidential	Consortium
8	P1	8.8	M6	M6	OUTCOME: WP11 Enabled	Other:	English	Confidential	Consortium
8	P1	8.9	M7	M7	OUTPUT: Business Specific Simulations Written Up as Submission for Journal Publication	Electronic version published in media	English	Public	Higher Education and Industry
8	P1	8.10	M7	M7	OUTPUT: WP6 Contribution	Electronic version published in media	English	Confidential	Consortium
9	**P7**	**9**	**M4**	**M9**	**Conduct In-Depth Needs Analysis**				
9	P7	9.1	M4	M6	OUTPUT: In-Depth Semi-Structured Interviews	Electronic version published in media	English	Confidential	Higher Education and Industry
9	P7	9.2	M4	M6	OUTPUT: Scenario Analysis	Electronic version published in media	English	Public	Higher Education and Industry
9	P7	9.3	M4	M6	OUTPUT: Literature Review	Electronic version published in media	English	Public	Higher Education and Industry
9	P7	9.4	M4	M6	OUTPUT: Statistical Analysis Conducted	Electronic version published in media	English	Public	Higher Education and Industry
9	P7	9.5	M7	M7	OUTPUT: Use Case Based Case Study	Electronic version published in media	English	Public	Higher Education and Industry
9	P7	9.6	M7	M8	OUTPUT: Extended Semi-Structured Interviews	Electronic version published in media	English	Public	Higher Education and Industry
9	P7	9.7	M8	M8	OUTCOME: Upcoming WPs Enabled	Electronic version published in media	English	Confidential	Consortium
9	P7	9.8	M4	M9	OUTPUT: Global Comparison	Electronic version published in media	English	Public	Higher Education and Industry
9	P7	9.9	M9	M10	OUTPUT: Case Studies Written Up as Submission for Journal Publication	Electronic version published in media	English	Public	Higher Education and Industry

Nº of WP	Lead organisation (Pn)	Deliverable Number	Start date	End date	Title of the deliverable	Medium that will be used (publication, electronic, online, other (specify))	Languages	Dissemination level (Public, Restricted, Confidential)	Target groups/potential beneficiaries
9	P7	9.10	M9	M9	OUTPUT: WP6 Contributed	Electronic version published in media	English	Confidential	Consortium
10	**P4**	**10**	**M7**	**M12**	**Create Case Studies**				
10	P4	10.1	M7	M7	OUTPUT: Design Guidelines for Business Workshops	Electronic version published in media	English	Public	Higher Education and Industry
10	P4	10.2	M7	M7	OUTCOME: Business Workshops Prepared	Electronic version published in media	English	Public	Higher Education and Industry
10	P4	10.3	M8	M10	OUTCOME: Business Workshops Delivered	Electronic version published in media	English	Public	Higher Education and Industry
10	P4	10.4	M10	M10	OUTCOME: Simulations Refreshed	Electronic version published in media	English	Public	Higher Education and Industry
10	P4	10.5	M11	M11	OUTPUT: Business Case Studies	Electronic version published in media	English	Public	Higher Education and Industry
10	P4	10.6	M11	M11	OUTPUT: Feedback to WP8 and WP9 Provided	Electronic version published in media	English	Confidential	Consortium
10	P4	10.7	M12	M12	OUTPUT: Case Studies Written Up as Submission for Journal Publication	Electronic version published in media	English	Public	Higher Education and Industry
10	P4	10.8	M12	M12	OUTPUT: WP6 Contributed	Electronic version published in media	English	Confidential	Consortium
11	**P8**	**11**	**M13**	**M18**	**Identify Variables and Game Changers**				
11	P8	11.1	M13	M13	OUTPUT: Co-Variance of Simulation Layer Variables	Electronic version published in media	English	Public	Higher Education and Industry
11	P8	11.2	M13	M13	OUTPUT: Idea for Experimentation	Electronic version published in media	English	Public	Higher Education and Industry
11	P8	11.3	M14	M14	OUTPUT: Key Digital Change Scenarios	Electronic version published in media	English	Public	Higher Education and Industry
11	P8	11.4	M14	M14	OUTPUT: State Space Performance	Electronic version published in media	English	Public	Higher Education and Industry
11	P8	11.5	M15	M15	OUTPUT: Dynamics Space Performance	Electronic version published in media	English	Public	Higher Education and Industry
11	P8	11.6	M16	M16	OUTPUT: Unity Space Characteristics	Electronic version published in media	English	Public	Higher Education and Industry
11	P8	11.7	M14	M18	OUTPUT: Tipping Points (incl. Business Workshops)	Electronic version published in media	English	Public	Higher Education and Industry
11	P8	11.8	M18	M18	OUTCOME: WP12 and WP13 Enabled	Electronic version published in media	English	Confidential	Consortium
11	P8	11.9	M18	M18	OUTPUT: Variables and Game Changers Written Up as Submission for Journal Publication	Electronic version published in media	English	Public	Higher Education and Industry

Nº of WP	Lead organisation (Pn)	Deliverable Number	Start date	End date	Title of the deliverable	Medium that will be used (publication, electronic, online, other (specify))	Languages	Dissemination level (Public, Restricted, Confidential)	Target groups/potential beneficiaries
11	P8	11.10	M18	M18	OUTPUT: WP6 Contributed	Electronic version published in media	English	Confidential	Consortium
12	**P2**	**12**	**M16**	**M21**	**Create Risk and Uncertainty Reduction Framework**				
12	P2	12.1	M16	M20	OUTPUT: Uncertainty Quantification Model	Electronic version published in media	English	Public	Higher Education and Industry
12	P2	12.2	M16	M18	OUTPUT: Framework Scenarios and Risks	Electronic version published in media	English	Public	Higher Education and Industry
12	P2	12.3	M16	M16	OUTPUT: Scoring Scheme	Electronic version published in media	English	Public	Higher Education and Industry
12	P2	12.4	M17	M17	OUTPUT: Maturity Assessment Technique	Electronic version published in media	English	Public	Higher Education and Industry
12	P2	12.5	M17	M17	OUTPUT: Intervention (Selection) Technique	Electronic version published in media	English	Public	Higher Education and Industry
12	P2	12.6	M17	M17	OUTPUT: Risk Visualization Method	Electronic version published in media	English	Public	Higher Education and Industry
12	P2	12.7	M17	M17	OUTPUT: Baseline Integrated Risk and Uncertainty Framework (Version 1.0)	Electronic version published in media	English	Public	Higher Education and Industry
12	P2	12.8	M18	M18	OUTCOME: Framework Validated with Business (Simulations)	Other:	English	Public	Higher Education and Industry
12	P2	12.9	M19	M19	OUTPUT: Integrated Risk and Uncertainty Framework (Version 2.0) Created	Electronic version published in media	English	Public	Higher Education and Industry
12	P2	12.10	M20	M20	OUTCOME: WP13 Enabled	Other:	English	Confidential	Consortium
12	P2	12.11	M21	M21	OUTPUT: Integrated Risk and Uncertainty Framework (Version 3.0)	Electronic version published in media	English	Public	Higher Education and Industry
12	P2	12.12	M21	M21	OUTPUT: Integrated Risk and Uncertainty Framework Submission for Journal Publication	Electronic version published in media	English	Public	Higher Education and Industry
12	P2	12.13	M20	M20	OUTPUT: WP6 Contributed	Other:	English	Confidential	Consortium
13	**P9**	**13**	**M19**	**M24**	**Create Design Principles for Rapid Diffusion of Innovative Ideas**				
13	P9	13.1	M19	M19	OUTPUT: Literature Research	Electronic version published in media	English	Public	Higher Education and Industry

Nº of WP	Lead organisation (Pn)	Deliverable Number	Start date	End date	Title of the deliverable	Medium that will be used (publication, electronic, online, other (specify))	Languages	Dissemination level (Public, Restricted, Confidential)	Target groups/potential beneficiaries
13	P9	13.2	M20	M20	OUTPUT: Actionable Design Principles	Electronic version published in media	English	Public	Higher Education and Industry
13	P9	13.3	M21	M21	OUTPUT: Testing Technique	Electronic version published in media	English	Public	Higher Education and Industry
13	P9	13.4	M22	M22	OUTCOME: Actionable Design Principles Verified	Electronic version published in media	English	Public	Higher Education and Industry
13	P9	13.5	M23	M23	OUTCOME: WP14 Enabled	Other:	English	Confidential	Consortium
13	P9	13.6	M23	M24	OUTPUT: Design Principles Written Up as Submission for Journal Publication	Electronic version published in media	English	Public	Higher Education and Industry
13	P9	13.7	M24	M24	OUTPUT: WP6 Contributed	Other:	English	Confidential	Consortium
14	**P10**	**14**	**M23**	**M28**	**Validate Research Findings with Experimental Labs**				
14	P10	14.1	M23	M23	OUTPUT: Design Guidelines for Experimental Labs	Electronic version published in media	English	Public	Higher Education and Industry
14	P10	14.2	M23	M23	OUTCOME: Experimental Labs Prepared	Electronic version published in media	English	Public	Higher Education and Industry
14	P10	14.3	M24	M30	OUTPUT: Experimental Labs Delivered	Other:	English	Public	Higher Education and Industry
14	P10	14.4	M28	M30	OUTPUT: Case Studies Written Up as Submission for Journal Publication	Electronic version published in media	English	Public	Higher Education and Industry
14	P10	14.5	M28	M30	OUTPUT: WP6 Contributed	Other:	English	Confidential	Consortium

PART VIII. Specific arrangements regarding Associated Partners (if applicable)

P27 and P28 are business partners in the project and do not have PIC numbers. As with all business partners they neither receive nor provide funding and are thus treated as associated partners.

Annex – Affiliated Entities (if applicable)

No affiliated entities are involved.